DANA BREVINI®

Motion Systems

BANKABLE VALVES

Technical Catalogue

January
2018

web edition

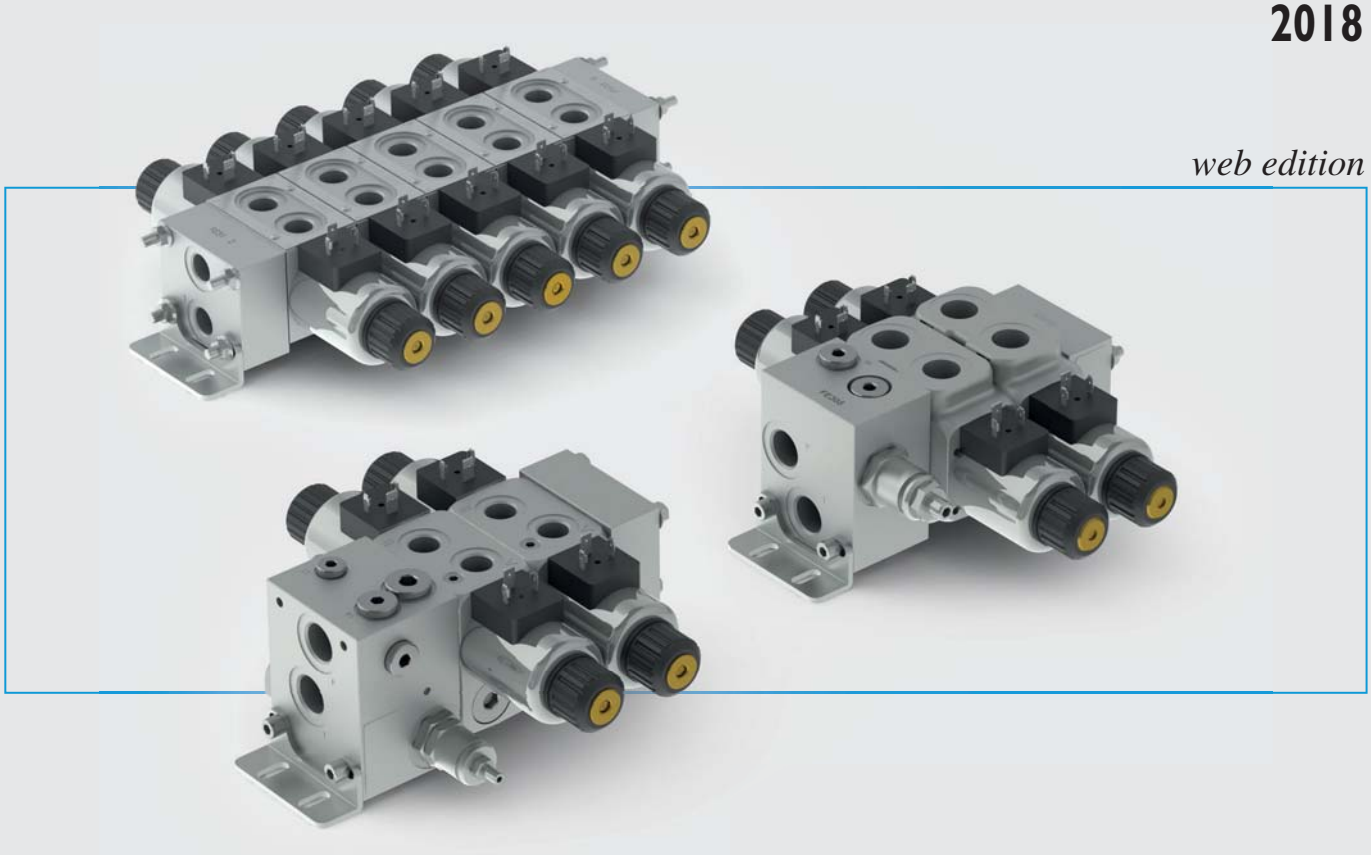

Table of contents

TECHNICAL INFORMATION 2

SIZE 6 5

ON/OFF AND PROPORTIONAL VALVES (CDC3 / CD3 / CX3 / CXQ3) 6
Composition form 8
Inlet module units 10
Working sections 25
Intermediate element 47
Outlet module units 53

PRE AND POST COMPENSATED VALVES (CXDH3 / CDH3 / CFS3) 56
Composition form 58
Inlet module units 59
Working sections 65
Intermediate element 78
Outlet module units 79

SIZE 10 81

ON/OFF VALVES (CD5) 82
Composition form 83
Inlet module units 84
Working sections 87
Outlet module units 90

MODULAR ELEMENTS 91
Valves and modular elements 92

ACCESSORIES 99
Interface for proportional directional valves HPV41 100
Mounting kit 101
Fixing feet 103
Calibrated diaphragms 104
Connectors 105
Coils. 106

HOW TO ORDER 113
Examples. 114

ELECTROMAGNETIC COMPATIBILITY 117

© 2018 Dana Brevini S.p.A. all rights reserved. Hydr-App, SAM Hydraulik, Aron, Brevini Hydraulics, BPE Electronics, VPS Brevini, OT Oiltechnology, logos are trademarks or are registered trademarks of Dana Brevini S.p.A. or other companies Dana in Italy and other countries.

The technical features supplied in this catalogue are non binding and no legal action can be taken against such material. Dana Brevini will not be held responsible for information and specifications which may lead to error or incorrect interpretations. Given the continuous technical research aimed at improved technical features of our products, Dana Brevini reserves the right to make change that are considered appropriate without any prior notice. This catalogue cannot be reproduced (in while or in part) without the prior written consent of Dana Brevini. This catalogue supersedes all previous ones.

Use of the products in this catalogue must comply with the operating limits given in the technical specifications. The type of application and operating conditions must be assessed as normal or in malfunction in order to avoid endangering the safety of people and/or items.

INTRODUCTION

Read this instructions carefully before installation. All operations must be carried out by qualified personnel following the instructions.

The user must periodically inspect, based on the conditions of use and the substances used, the presence of corrosion, dirt, the state of wear and correct function of the valves.

Always observe first the operating conditions given in datasheet of the valve.

HYDRAULIC FLUID

Observe the recommendations given in the data sheet of the valve. Use only mineral oil (HL, HLP) according to DIN 51524. Use of other different fluids may damage the good operation of the valve.

CONVERSION TABLE SSU / °E / mm²/s

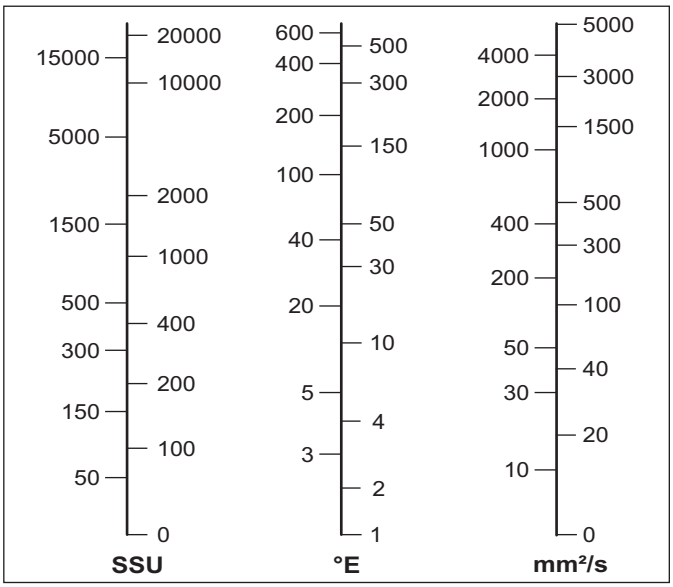

VISCOSITY

Observe the recommendations given in the data sheet of the valve.The oil viscosity must be in the range of 10 mm²/s to 500 mm²/s.
Recommended oil viscosity 46 mm²/s (32 mm²/s for Cartridge valves)

Table 1: ISO viscosity grades

Average kinematic viscosity mm²/s @ 40°C	Viscosity grade	Kinematic-viscosity limits mm²/s @ 40°C	
		min.	max.
ISO VG 10	10	9.00	11.0
ISO VG 15	15	13.5	16.5
ISO VG 22	22	19.8	24.2
ISO VG 32	32	28.8	35.2
ISO VG 46	46	41.4	50.6
ISO VG 68	68	61.2	74.8
ISO VG 100	100	90.0	110

= Values used in the chart "Oil viscosity according to temperature"

OIL VISCOSITY ACCORDING TO TEMPERATURE

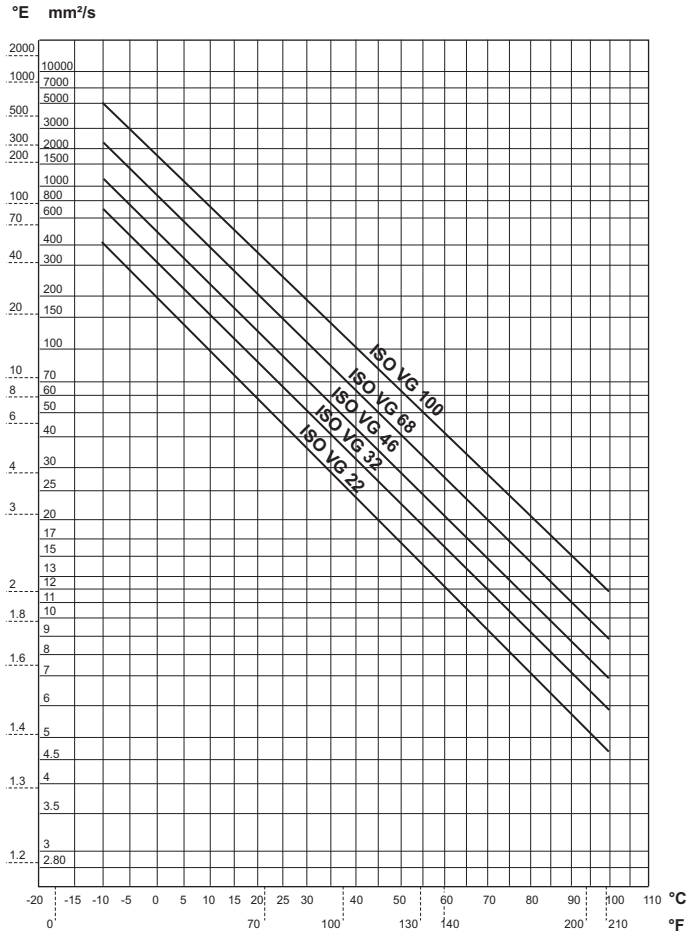

CONTAMINATION

Oil contamination is the main cause of faults and malfunction in hydraulic systems. Abrasive particles in the fluid erode or block moving parts, leading to system malfunction.
The valves we are offering do not require filtering characteristics any higher than those needed for usual hydraulic components such as pumps, motors, etc.

However, accurate filtering does guarantee reliability and a long life to all the system's hydraulic parts. Reliable performance and long working life for all oil-pressure parts is assured by maintaining the level of fluid contamination within the limits specified in the data sheet of the valve.

Hydraulic fluid must also be cleaned properly before filling the hydraulic circuit, especially when commissioning a new system, as this is when the oil contamination generally peaks due to its flushing effect on the components, and the running-in of the pump.
Maximum contamination level is required on datasheet of the valve according to ISO 4406:1999.

In the following table there is the correspondence between ISO 4406:1999 and old standard NAS 1638 for information purpose:
The standard ISO 4406:1999 defines the contamination level with three numbers that relate with the number of particles of average dimension equal or greater than 4 µm, 6 µm e 14 µm, in 1 ml of fliuid.

In following table there is a reference to reccomended contamination level and correspondence with old NAS 1638 standard.

Table 2: Reccomanded contamination level.

Type of system **Type of valve**	**Oil filtration recommendations**		
	Cleanliness class recommended		Absolute filtration micron rating (**)
	ISO 4406 : 1999	NAS 1638 (*)	
Systems or components operating at HIGH PRESSURE > 250 bar (3600 psi) HIGH DUTY CYCLE APPLICATIONS Systems or components with LOW dirt tolerance	18 / 16 / 13	7 - 8	5
Systems or components operating at MEDIUM / HIGH PRESSURE Systems and components with moderate dirt tolerance	19 / 17 / 14	9	10
Systems or components operating at LOW PRESSURE < 100 bar (1500 psi) LOW DUTY CYCLE APPLICATIONS Systems and components with GOOD dirt tolerance	20 / 18 / 15	10 - 11	20

* Contamination class NAS 1638: it is determined by counting the total particles of different size ranges contained in 100 ml of fluid.
** Absolute filtration: it is a characteristic of each filter, it refers the size (in micron) of the largest sperical particle wich may pass through the filter.

WORKING TEMPERATURES

Ambient temperature range: -25°C to +60°C
Fluid temperature range (NBR seals): -25°C to +75°C
Thermal shocks can affect the performance and the expected life of the product, hence it is necessary to protect the product from these conditions.

SEALS

O-rings made in Acrylonitrile Butadiene (NBR) are normally fitted on the valves. The backup rings that protect the O-rings are also made in NBR, or sometimes PTFE. Both the O-rings and the backup rings are suitable for the working temperatures mentioned above.
In the case of fluid temperatures > 75°C, FKM seals must be used (identified with "V1" variant).

ELECTRICAL POWER SUPPLY

Solenoid valves coils are designed to operate safely in the voltage range of ±10% of nominal voltage at max. 60°C ambient temperature. The combination of permanent overvoltage and very hot temperatures can stress the solenoid. Therefore always a good heat dissipation and voltage level has to be assured. Faulty coils may only be replaced by new, interchangeable, tested components in original-equipment quality.
Before removing a coil, voltage must be disconnected.
When replacing the coil, be aware to insert O-Rings in order to avoid the entrance of water.

INSTALLATION

The mounting surface must feature surface quality specified in data sheet of the valve: for example for Cetop valves generally is required Ra ≤ 1.6µm and flatness ≤ 0.03 mm over 100 mm length. Normally in cartridge valve for sealing diameters of the cavities, is required roughness Ra ≤ 1.6µm. The surfaces and openings in the assembly plate must be free from impurity or dirt.
Make sure the O-Rings fit correctly in their seats.
Fixing screws must comply with the dimensions and the strength class specified in the data sheet and must be tightened at the specified tightening torque.
Complete the electrical wiring. For circuit examples and pin assignments, see the relevant datasheet.

USE AND MAINTENANCE

Observe the functional limits indicated in the technical catalogue
On a periodic basis and based on the conditions of use, check for cleanliness, state of wear or fractures and correct performance of the valve.
If the O-rings are damaged, replace them with those supplied by the manufacturer.
To assure the best working conditions at all time, check the oil
and replace it periodically (after the first 100 working hours and then after every 2000 working hours or at least once every year).
Attention: all installation and maintenance intervention must be performed by qualified staff.

TRANSPORT AND STORAGE

The valve must be handled with care to avoid damage caused by impact, which could compromise its efficiency.
In the case of storage, keep the valves in a dry place and protect against dust and corrosive substances.
When storing for periods of more than 6 months, fill the valve with preserving oils and seal it.

CONVERSION CHART

Type	SI units		Alternative units		Conversion factor
Force	Newton	(N) [kgm/s²]	Kilogram force	(kgf)	1 kgf = 9.807 N
			pound force	(lbf) [lbf/s²]	1 lgf = 4.448 N
Length	millimeter	(mm) [10 m]	inch	(in)	1 in = 25.4 mm
	meter	(km) [1000 m]	yard	(yd) [3ft]	1 m = 1.0936 yd
	kilometer	(km) [1000 m]	mile	(mile) [1760 yd]	1 mile = 1.609 km
Torque	Newton meter	(Nm)	pound force.feet	(lbf.ft)	1 lbf.ft = 1.356 Nm
Power	kiloWatt (kW)	[1000 Nm/s]	horsepower	(hp)	1 kW = 1.341 hp
			metric horsepower	(CV)	1 kW = 1.36 CV
Pressure	MegaPascal	(MPa) [N/mm²]	bar		1 MPa = 10 bar
			psi (lbf/ln²)		1 MPa = 145 psi
			ton/f/ln²		1 ton/f/ln² = 15.45 MPa
Flow rate	liter/min	(l/min)	UK gal/min		1 UK gal/min = 4.546 l/min
			US gal/min		1 US gal/min = 3.785 l/min
Temperature	Degrees Celsius	(°C)	Farenheit	(°F)	1°F = 1.8 °C+32

SIZE 6

ON/OFF VALVES
PROPORTIONAL VALVES
PRE AND POST COMPENSATED VALVES

Introduction

- Bankable ON/OFF directional control valves;
- Bankable PROPORTIONAL directional control valves;
- Bankable PROPORTIONAL COMPENSATED flow regulators;
- ON/OFF valves available in two sizes, with reduced overall dimensions or for high flow rates;
- Available for parallel or series circuits;
- Available with housing with threaded ports or interfaces for modular valves;
- Available for Load Sensing circuits;
- Assemblable with FEH30 and FUH3 family inlet and outlet modules;
- Assemblable with CXDH3, CDH3, CD5 family valves;
- Assemblable with Dana Brevini HPV valves (intermediate element required).

1

Overall dimensions with CDC3 valves

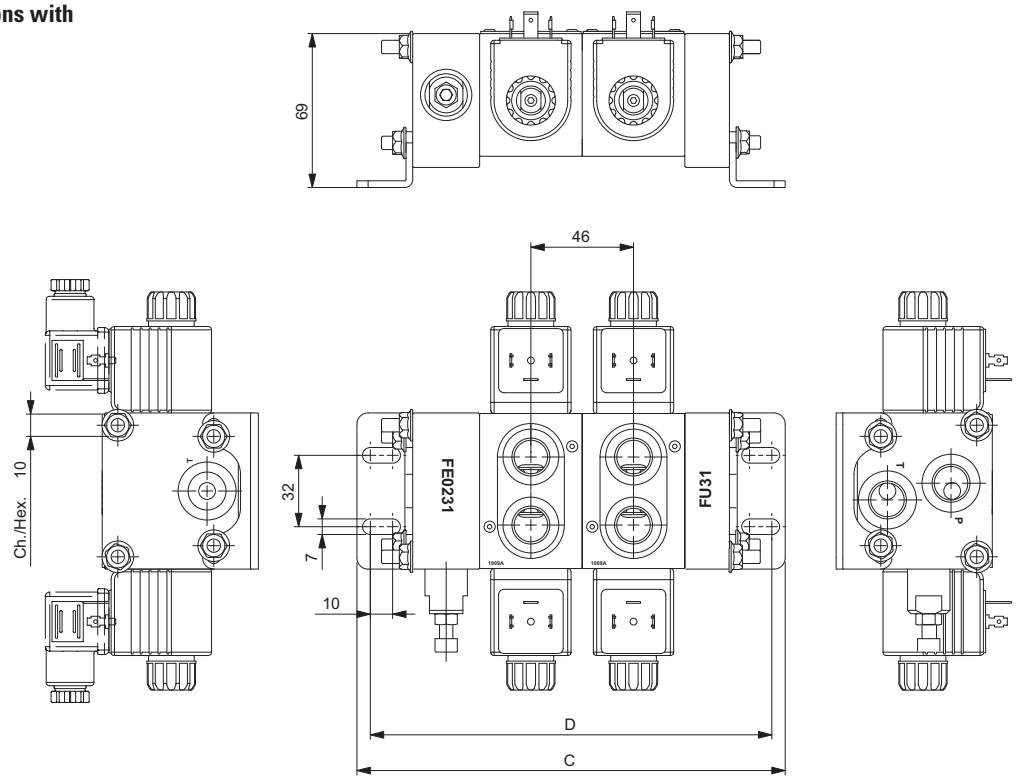

No. elements	Inlet module			
	FE / FE02		FE	
	C mm	D mm	C mm	D mm
2	192	180	202	190
3	238	226	248	236
4	284	272	294	282
5	330	318	340	326
6	376	364	386	374
7	422	410	432	420
8	468	456	478	466

Overall dimensions with CD3 valves

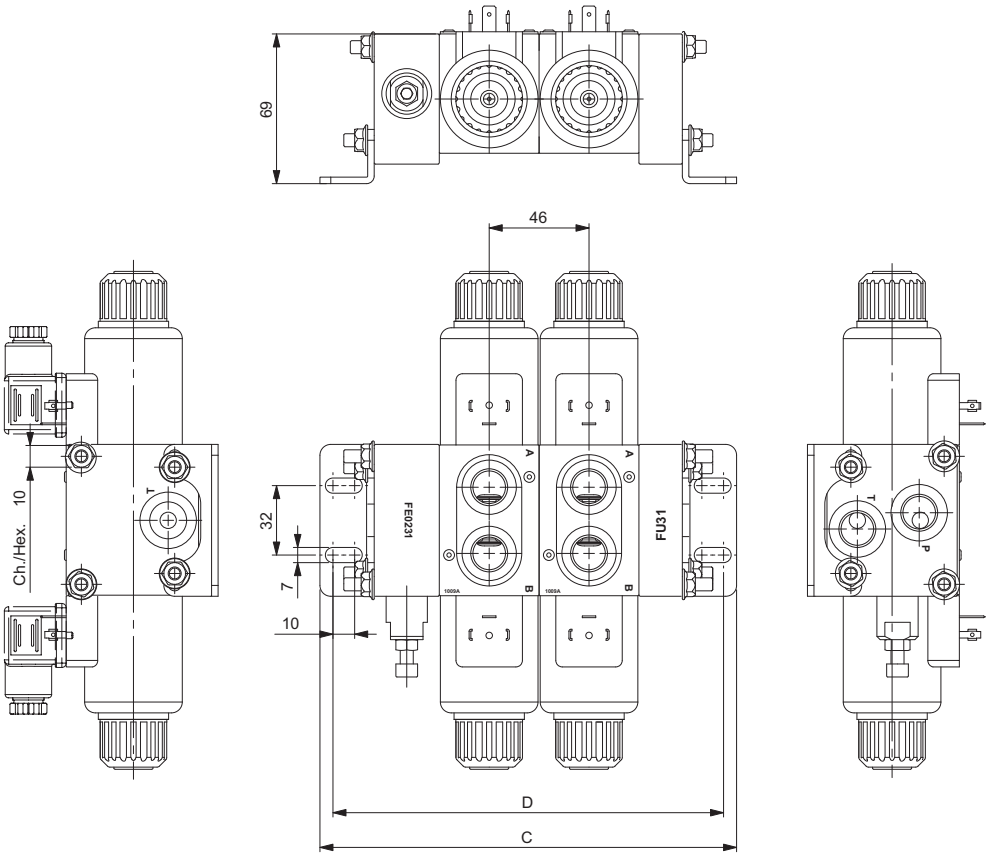

No. elements	Inlet module			
	FE / FE02		FE	
	C mm	D mm	C mm	D mm
2	192	180	202	190
3	238	226	248	236
4	284	272	294	282
5	330	318	340	326
6	376	364	386	374
7	422	410	432	420
8	468	456	478	466

Composition form

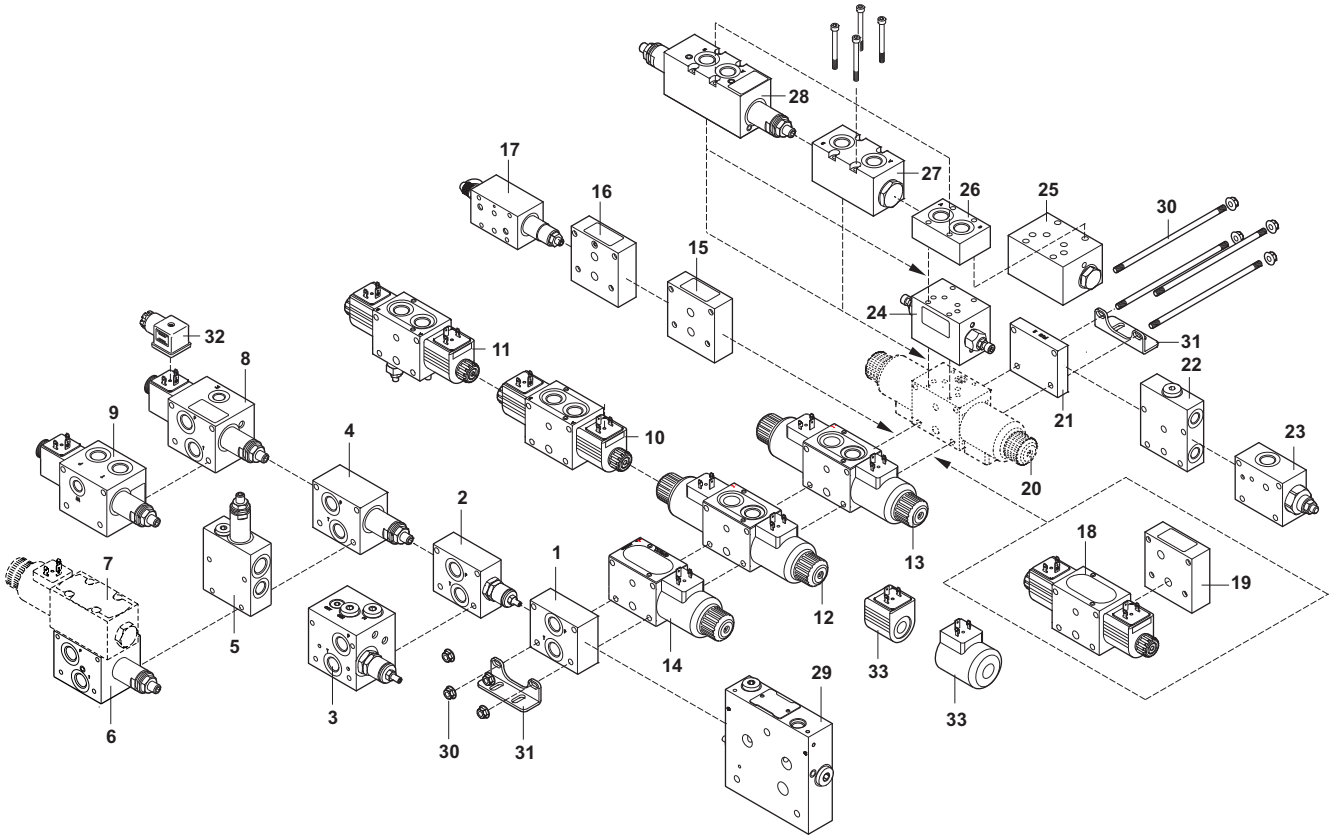

SIZE 6 valves CDC3, CD3, CX3 can be assembled with:
- **valves CXDH3, CDH3, CFS3 (page 56);**
- **with SIZE 10 valves CD5 (page 82);**
- **with proportional directional valves HPV41 (see catalogue code DOC00079) using the interface HSIF (page 100).**

To obtain the best performances, we suggest to assemble the working sections with higher flow rate near the inlet module, leaving the ones with lower flow at the end of the assembled valve.

How to order

To order the assembly, specify the codes in progressive order (inlet, valves, outlet, mounting kit, feet). See example page 114.

For any further special version not shown in this catalogue, please contact our Technical Department.

Composition form

Ref.	Type	Description	Page
1	FE3 FELS	Inlet module units no pressure relief valve Inlet module units with LS line no pressure relief valve	10 11
2	FE02	Inlet module units with pressure relief valve (up to 20 l/min)	12
3	FE02Q	Inlet module units with LS line, compensator and pressure relief valve	13
4	FE10 FE10LS	Inlet module units with pressure relief valve Inlet module units with LS line with pressure relief valve	15 16
5	FE10S	Inlet module units with side ports and pressure relief valve	17
6	FE10X	Inlet module units with pressure relief valve for proportional pressure compensated flow regulator XQP3	19
7	XQP3	Pressure compensated flow regulator see catalogue “Valves and Electronics” code. DOC00078	
8	FE10P	Inlet module units with pressure relief valve and electrical venting valve	21
9	FE10PS	Inlet module units with side ports, pressure relief valve and electrical venting valve	23
10	CDC3	Directional control bankable valve with A09 coils CDC3 / CDCM3 (variants)	25 34
11	CD3M3	Directional control bankable valve with pressure relief valve and A09 coils CDC3 / CDCM3 (variants)	30 34
12	CD3	Directional control bankable valve with D15 coils CD3 (variants)	35 40
13	CX3	Solenoid operating proportional control bankable valves	41
14	CXQ3	Open loop proportional pressure compensated bankable flow regulators	44
15	FI3A	Intermediate element	47
16	FI3L	Intermediate element with LS line	48
17	FI3RP	Intermediate element with pressure reducing valve	49
18	CDC3R	Directional control valve connection B-P for Intermediate element FI3BP	50
19	FI3BP	Intermediate element for valve CDC3R	52
20	CD3 CDC3 CX3	Body G-H-M for modular valves	25 - 35 - 41
21	FU3	Outlet module units	53
22	FUT3	Outlet module units with side ports	54
23	FUS3	Outlet module units with overcenter and top port	55
24	V08000005	Intermediate element with flow regulator on A and B lines	92
25	V08000002	Intermediate element with pilot operated check stackable valves	93
26	CM3F	Modular elements with ports A-B	94
27	CM3P	Modular pilot operated check bankable valves	95
28	CM3M	Modular max. pressure bankable valves	97
29	HSIF	Interface for proportional directional valves HPV41	100
30	—	Mounting kit	101
31	—	Fixing feet	103
32	—	Connectors	105
33	—	Coils	106

INLET MODULE UNITS NO PRESSURE RELIEF VALVE

Module units FE no pressure relief valve.

- Threaded ports (P and T), G3/8" or 9/16"-18UNF
- Maximum flow 40 l/min.
- Aluminum body.

FEATURES

Max. operating pressure	250 bar
Max. Flow	40 l/min
Hydraulic fluid	DIN 51524 Mineral oils
Fluid viscosity	10 ÷ 500 mm²/s
Fluid temperature	-25°C ÷ 75°C
Ambient temperature	-25°C ÷ 60°C
Max. contamination level (filter $ß_{25} \geq 75$)	ISO 4406:1999: class 21/19/16 NAS 1638: class 10
Weight	0.3 kg

HYDRAULIC SYMBOL

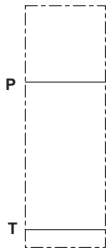

ORDERING CODE

FE	Inlet module unit no pressure relief valve
3	Size
*	Port sizes: **1** = G3/8" **2** = 9/16"-18UNF
**	**00** = No variant **V1** = Viton
2	Serial No.

OVERALL DIMENSIONS

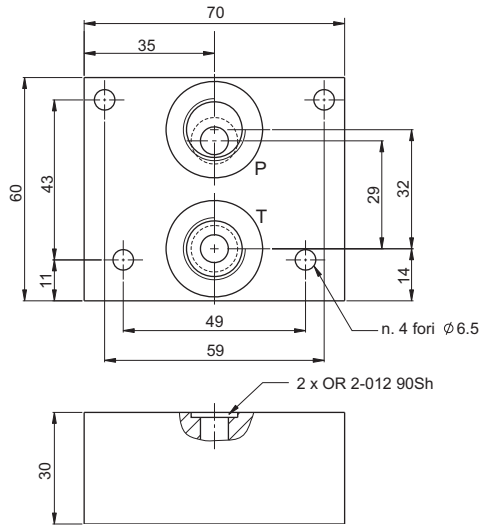

INLET MODULE UNITS WITH LS LINE NO PRESSURE RELIEF VALVE

Module units FELS with LS line, no pressure relief valve.

- Threaded ports (P and T) sizes G3/8" and LS size G1/4".
- Maximum flow 40 l/min.
- Aluminum body.

FEATURES

Max. operating pressure	250 bar
Max. Flow	40 l/min
Hydraulic fluid	DIN 51524 Mineral oils
Fluid viscosity	10 ÷ 500 mm²/s
Fluid temperature	-25°C ÷ 75°C
Ambient temperature	-25°C ÷ 60°C
Max. contamination level (filter $ß_{25} \geq 75$)	ISO 4406:1999: class 21/19/16 NAS 1638: class 10
Weight	0.3 kg

HYDRAULIC SYMBOL

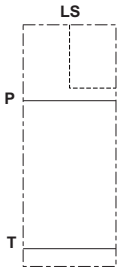

ORDERING CODE

FELS	Inlet module unit no pressure relief valve with LS line
3	Size
1	Ports: **1** = G3/8" (P,T ports) G1/4" (LS port)
**	**00** = No variant **V1** = Viton
2	Serial No.

OVERALL DIMENSIONS

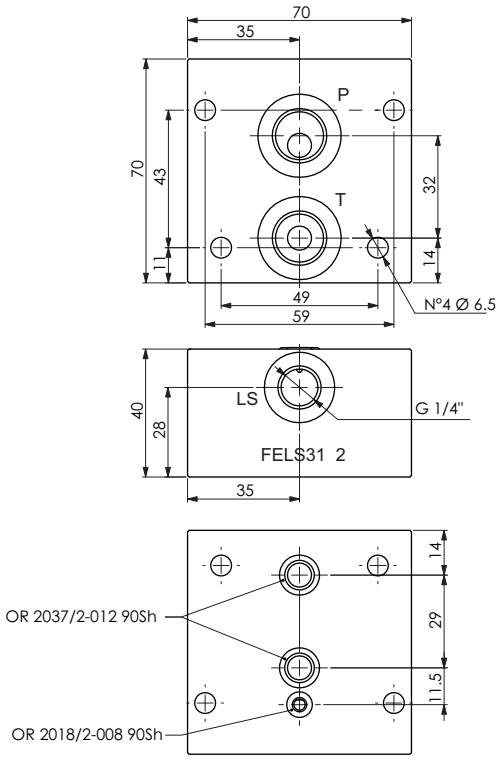

INLET MODULE UNITS WITH PRESSURE RELIEF VALVE (UP TO 20 L/MIN)

Module units FE02 with CMP-MC/MS adjustable pressure relief valve

- Manual adjustment with a grub screw.
- Fhreaded ports (P and T) sizes G3/8" or 9/16""-18UNF.
- Maximum flow 20 l/min.
- Aluminum body.

FEATURES

Max. operating pressure	250 bar
Max. Flow	20 l/min
Hydraulic fluid	DIN 51524 Mineral oils
Fluid viscosity	10 ÷ 500 mm²/s
Fluid temperature	-25°C ÷ 75°C
Ambient temperature	-25°C ÷ 60°C
Max. contamination level (filter $ß_{25} \geq 75$)	ISO 4406:1999: class 21/19/16 NAS 1638: class 10
Weight	0.42 kg

Pressure relief valve (CMP-MC/MS	
Setting range (*):	
Spring 1	max 50 bar
Spring 2	max 90 bar
Spring 3	max 190 bar
Spring 4	max 290 bar

(*) The minimum permissible setting pressure depending on the spring: see curves.

HYDRAULIC SYMBOL

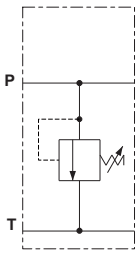

ORDERING CODE

FE02	Inlet module unit (up to 20 l/min) with pressure relief valve
3	Size
*	Port sizes: **1** = G3/8" **2** = 9/16"-18UNF
C	Adjustment: **C** = Grub screw
*	Setting ranges **1** = 0 ÷ 50 bar (white spring) **2** = 35 ÷ 90 bar (green spring) **3** = 75 ÷ 190 bar (yellow spring) **4** = 160 ÷ 290 bar ** (red spring)
**	**00** = No variant **V1** = Viton
3	Serial No.

(**) Setting referred to the maximum pressure reached from the relief valve. **Do not exceed the maximum working pressure 250 bar.**

PRESSURE-FLOW RATE

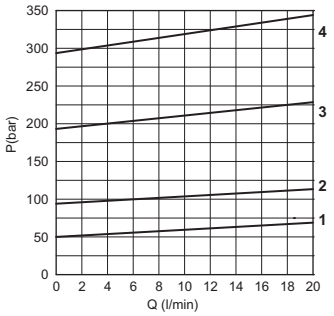

MIN.SETTING PRESSURE

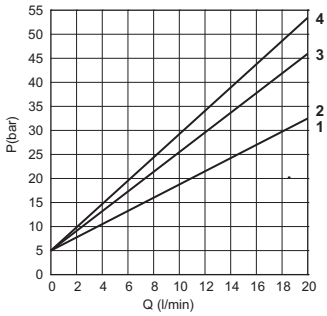

1 = 0÷50 bar - 2 = 35÷90 bar - 3 = 75÷190 bar - 4 = 160÷290 bar
Fluid used: mineral based oil with viscosity 46 mm²/s at 40°C.

OVERALL DIMENSIONS

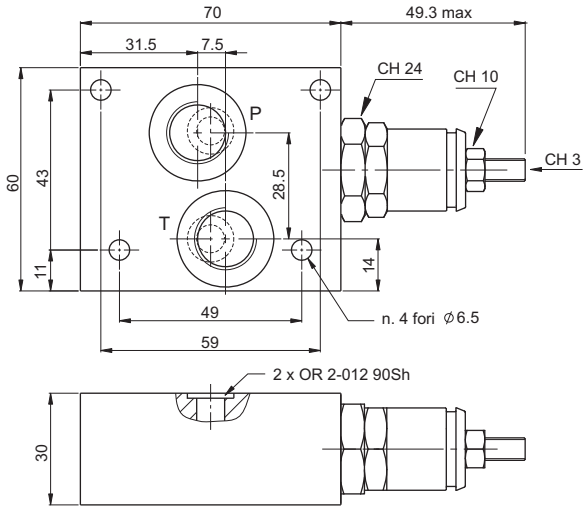

INLET MODULE UNITS WITH LS LINE, COMPENSATOR AND PRESSURE RELIEF VALVE

Module units FE02Q with pressure compensator for fixed displacement pumps and CMP-MC/MS adjustable pressure relief valve on LS line

- Manual adjustment with a grub screw.
- Screw with orifice for LS bleeding.
- Threaded ports P-T, G3/8" and LS, G1/4".
- Maximum flow 40 l/min.
- Aluminum body.

HYDRAULIC SYMBOL

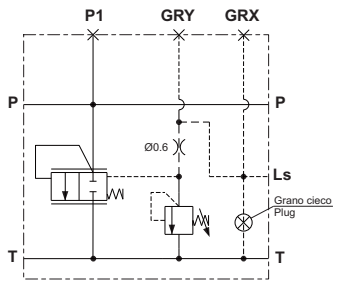

FEATURES

Max. operating pressure	250 bar
Max. Flow	40 l/min
Hydraulic fluid	DIN 51524 Mineral oils
Fluid viscosity	10 ÷ 500 mm²/s
Fluid temperature	-25°C ÷ 75°C
Ambient temperature	-25°C ÷ 60°C
Max. contamination level (filter $ß_{25} \geq 75$)	ISO 4406:1999: class 21/19/16 NAS 1638: class 10
Weight	1 kg

Pressure relief valve (CMP-MC/MS	
Setting range (*):	
Spring 1	max 50 bar
Spring 2	max 90 bar
Spring 3	max 190 bar
Spring 4	max 290 bar

(*) The minimum permissible setting pressure depending on the spring: see curves.

ORDERING CODE

FE02Q	Inlet module unit (up to 40 l/min) with compensator and pressure relief valve
3	Size
*	Ports: **1** = G3/8" (P,T ports) - G1/4" (LS port) **2** = 9/16"-18UNF (P,T ports) - 7/16"-20UNF (LS port)
C	Adjustment: **C** = Grub screw
*	Setting ranges **1** = 0 ÷ 50 bar (white spring) **2** = 35 ÷ 90 bar (green spring) **3** = 75 ÷ 190 bar (yellow spring) **4** = 160 ÷ 290 bar ** (red spring)
**	**00** = No variant **V1** = Viton
1	Serial No.

(**) Setting referred to the maximum pressure reached from the relief valve. **Do not exceed the maximum working pressure 250 bar.**

PRESSURE COMPENSATOR

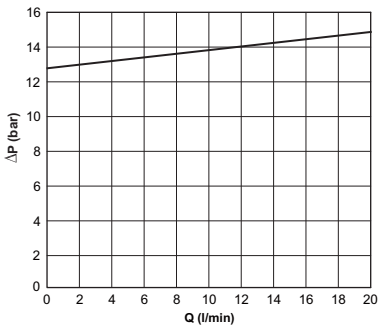

Fluid used: mineral based oil with viscosity 46 mm²/s at 40°C.

To obtain a correct compensation the inlet flow must be 8% greater the sum of the regulated flow.

OVERALL DIMENSIONS

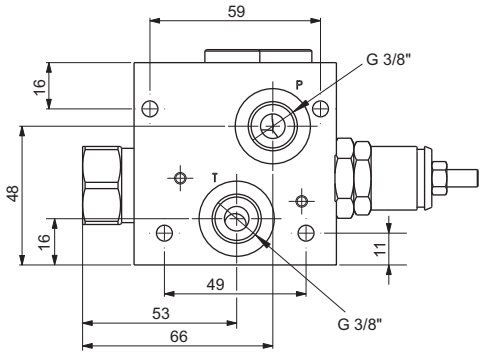

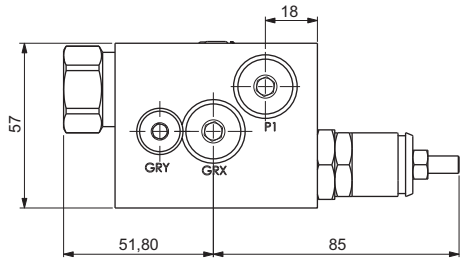

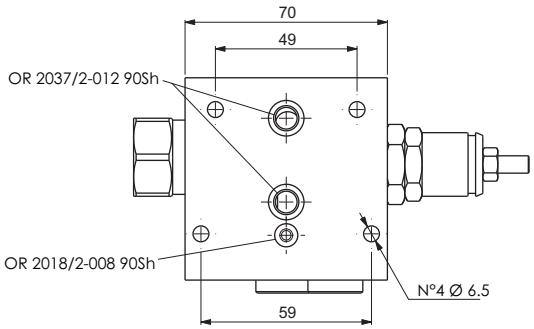

INLET MODULE UNITS WITH PRESSURE RELIEF VALVE

Module units FE10 with CMP10 adjustable pressure relief valve.

- Manual adjustment with a grub screw or plastic knob.
- Threaded ports P-T sizes G3/8" or 9/16"-18UNF.
- Maximum flow 40 l/min.
- Aluminum body.

FEATURES

Max. operating pressure	250 bar
Max. Flow	40 l/min
Hydraulic fluid	DIN 51524 Mineral oils
Fluid viscosity	10 ÷ 500 mm²/s
Fluid temperature	-25°C ÷ 75°C
Ambient temperature	-25°C ÷ 60°C
Max. contamination level (filter $ß_{25} \geq 75$)	ISO 4406:1999: class 21/19/16 NAS 1638: class 10
Weight	0.6 kg

Pressure relief valve (CMP10...)	
Setting range (*):	
Spring 1	max 50 bar
Spring 2	max 150 bar
Spring 3	max 320 bar

(*) The minimum permissible setting pressure depending on the spring: see curves.

HYDRAULIC SYMBOL

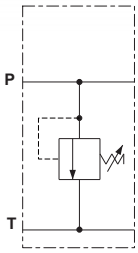

ORDERING CODE

FE10	Inlet module unit (up to 40 l/min) with pressure relief valve
3	Size
*	Port sizes: **1** = G3/8" **2** = 9/16"-18UNF
*	Adjustment: **M** = Plastic knob **C** = Grub screw
*	Setting ranges **1** = max. 50 bar (white spring) **2** = max. 150 bar (yellow spring) **3** = max. 320 bar** (green spring)
**	**00** = No variant **V1** = Viton
2	Serial No.

(**) Setting referred to the maximum pressure reached from the relief valve. **Do not exceed the maximum working pressure 250 bar.**

PRESSURE-FLOW RATE

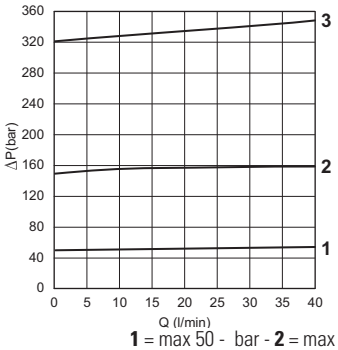

MIN.SETTING PRESSURE

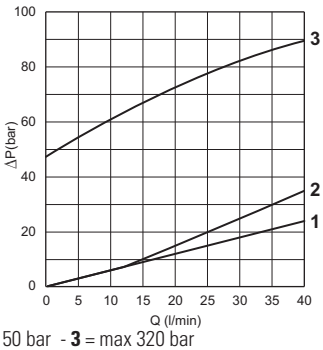

1 = max 50 - bar - **2** = max 150 bar - **3** = max 320 bar

Fluid used: mineral based oil with viscosity 46 mm²/s at 40°C.

OVERALL DIMENSIONS

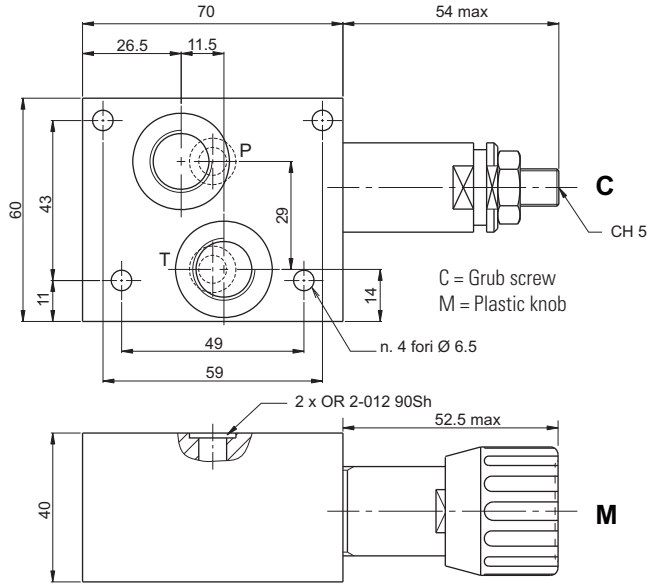

INLET MODULE UNITS WITH LS LINE WITH PRESSURE RELIEF VALVE

Module units FE10LS with LS line and CMP10 adjustable pressure relief valve.

- Manual adjustment with a grub screw or plastic knob.
- Threaded ports P-T, G3/8" and LS, G1/4".
- Maximum flow 40 l/min.
- Aluminum body.

HYDRAULIC SYMBOL

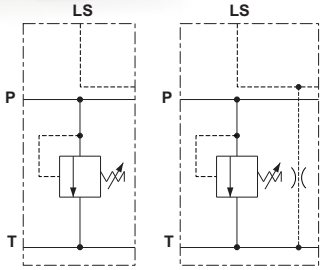

FE10LS.. FE10LS..J6.

FEATURES

Max. operating pressure	250 bar
Max. Flow	40 l/min
Hydraulic fluid	DIN 51524 Mineral oils
Fluid viscosity	10 ÷ 500 mm²/s
Fluid temperature	-25°C ÷ 75°C
Ambient temperature	-25°C ÷ 60°C
Max. contamination level (filter ß25 ≥ 75)	ISO 4406:1999: class 21/19/16 NAS 1638: class 10
Weight	0.6 kg

Pressure relief valve (CMP10...)	
Setting range (*):	
Spring 1	max 50 bar
Spring 2	max 150 bar
Spring 3	max 320 bar

(*) The minimum permissible setting pressure depending on the spring: see curves.

ORDERING CODE

FE10LS	Inlet module unit (up to 40 l/min) with pressure relief valve and LS line
3	Size
1	Ports: **1** = G3/8" (P,T ports) G1/4" (LS port)
*	Adjustment: **M** = Plastic knob **C** = Grub screw
*	Setting ranges **1** = max. 50 bar (white spring) **2** = max. 150 bar (yellow spring) **3** = max. 320 bar ** (green spring)
**	**00** = No variant **J6** = With LS bleed **V1** = Viton
2	Serial No.

(**) Setting referred to the maximum pressure reached from the relief valve. Do not exceed the maximum working pressure 250 bar.

OVERALL DIMENSIONS

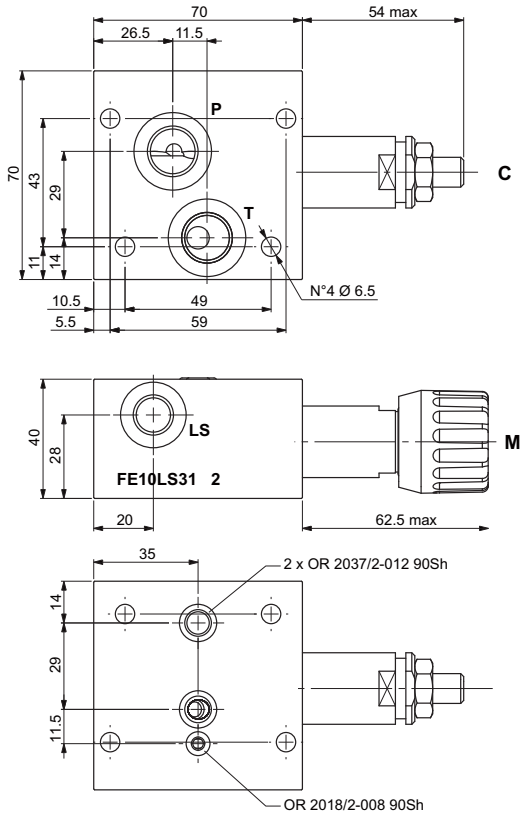

PRESSURE-FLOW RATE

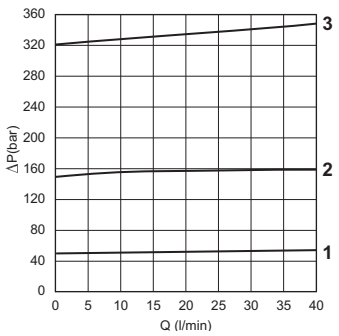

MIN.SETTING PRESSURE

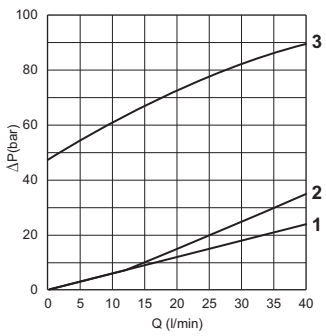

1 = max 50 bar - **2** = max 150 bar - **3** = max 320 bar
Fluid used: mineral based oil with viscosity 46 mm²/s at 40°C.

C = Grub screw
M = Plastic knob

INLET MODULE UNITS WITH SIDE PORTS AND PRESSURE RELIEF VALVE

Inlet module units FE10S with side ports and CMP10 adjustable pressure relief valve.

- Manual adjustment with a grub screw or plastic knob.
- Threaded ports P-T, G3/8" or G3/8"(P) - G1/2"(T).
- Maximum flow 40 l/min.
- Aluminum body.

FEATURES

Max. operating pressure	250 bar
Max. Flow	40 l/min
Hydraulic fluid	DIN 51524 Mineral oils
Fluid viscosity	10 ÷ 500 mm^2/s
Fluid temperature	-25°C ÷ 75°C
Ambient temperature	-25°C ÷ 60°C
Max. contamination level (filter $ß_{25} \geq 75$)	ISO 4406:1999: class 21/19/16 NAS 1638: class 10
Weight	0.6 kg

Pressure relief valve (CMP10...)	
Setting range (*):	
Spring 1	max 50 bar
Spring 2	max 150 bar
Spring 3	max 320 bar

(*) The minimum permissible setting pressure depending on the spring: see curves.

HYDRAULIC SYMBOL

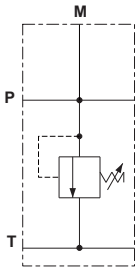

ORDERING CODE

FE10S	Inlet module unit with side ports and pressure relief valve (up to 40 l/min)
3	Size
*	Ports: **1** = G3/8" ports P,T **5** = G3/8" port P - G1/2" port T
*	Adjustment: **M** = Plastic knob **C** = Grub screw
*	Setting ranges **1** = max. 50 bar (white spring) **2** = max. 150 bar (yellow spring) **3** = max. 320 bar ** (green spring)
**	**00** = No variant **V1** = Viton
1	Serial No.

(**) Setting referred to the maximum pressure reached from the relief valve. Do not exceed the maximum working pressure 250 bar.

PRESSURE-FLOW RATE

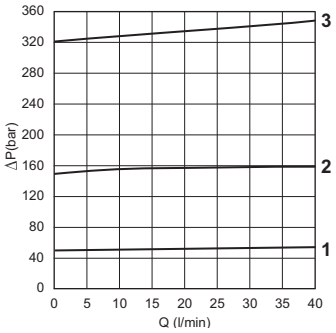

MIN.SETTING PRESSURE

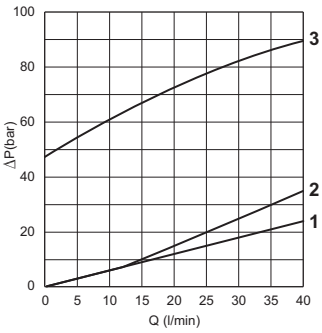

1 = max 50 bar - **2** = max 150 bar - **3** = max 320 bar
Fluid used: mineral based oil with viscosity 46 mm^2/s at 40°C.

OVERALL DIMENSIONS

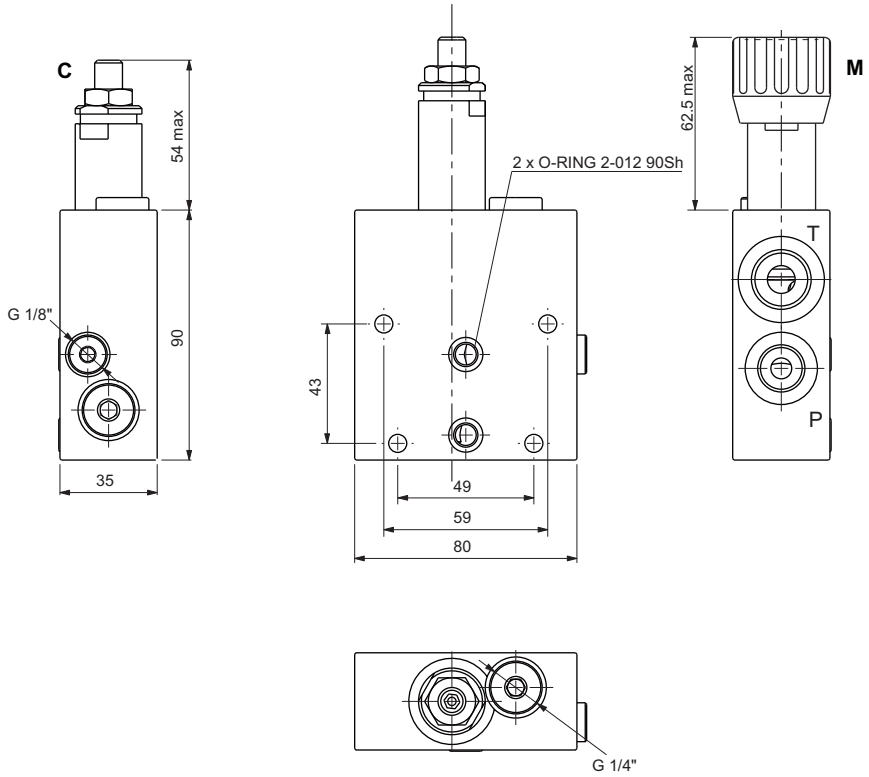

C = Grub screw
M = Plastic knob

INLET MODULE UNITS WITH PRESSURE RELIEF VALVE FOR PROPORTIONAL PRESSURE COMPENSATED FLOW REGULATOR XQP3

Module units FE10X for proportional pressure compensated flow regulator XQP3 . With CMP10 adjustable pressure relief valve.

- Manual adjustment with a grub screw or plastic knob.
- Threaded ports P-T sizes G3/8".
- Maximum flow 40 l/min.
- Aluminum body.

FEATURES

Max. operating pressure	250 bar
Max. Flow	40 l/min
Hydraulic fluid	DIN 51524 Mineral oils
Fluid viscosity	10 ÷ 500 mm²/s
Fluid temperature	-25°C ÷ 75°C
Ambient temperature	-25°C ÷ 60°C
Max. contamination level (filter $ß_{25} \geq 75$)	ISO 4406:1999: class 19/17/14 NAS 1638: class 8
Weight	0.6 kg

Pressure relief valve (CMP10...)	
Setting range (*):	
Spring 1	max 50 bar
Spring 2	max 150 bar
Spring 3	max 320 bar

(*) The minimum permissible setting pressure depending on the spring: see curves.

HYDRAULIC SYMBOL

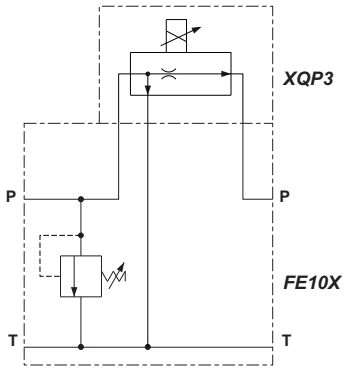

ORDERING CODE

FE10X	Inlet module unit (up to 40 l/min)for proportional pressure compensated flow regulator
3	Size
*	Ports: **1** = G3/8" ports P,T
*	Adjustment: **M** = Plastic knob **C** = Grub screw
*	Setting ranges **1** = max. 50 bar (white spring) **2** = max. 150 bar (yellow spring) **3** = max. 320 bar ** (green spring)
**	**00** = No variant **V1** = Viton
1	Serial No.

(**) Setting referred to the maximum pressure reached from the relief valve. Do not exceed the maximum working pressure 250 bar.

PRESSURE-FLOW RATE

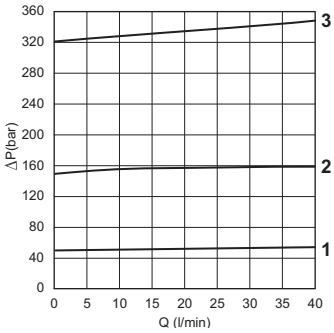

MIN.SETTING PRESSURE

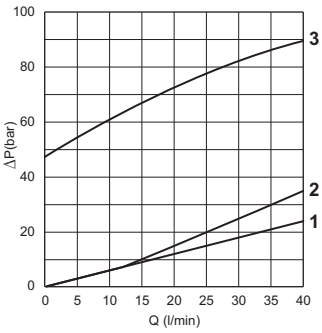

1 = max 50 bar - **2** = max 150 bar - **3** = max 320 bar
Fluid used: mineral based oil with viscosity 46 mm²/s at 40°C.

OVERALL DIMENSIONS

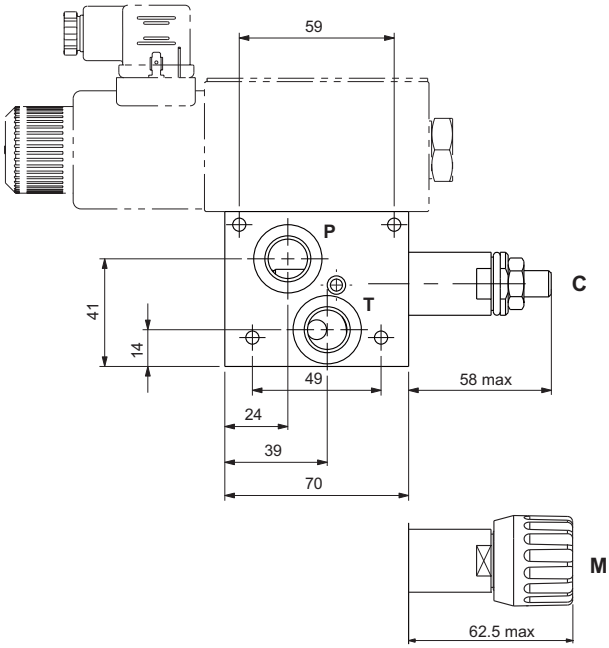

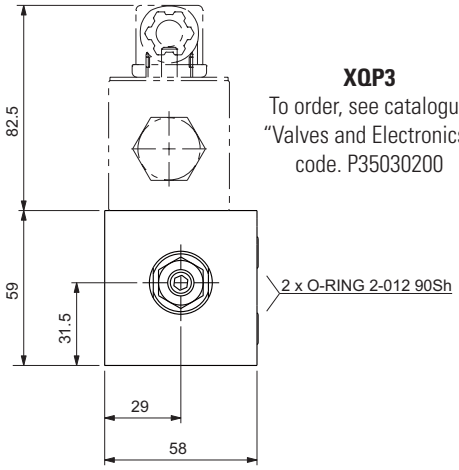

XQP3
To order, see catalogue
"Valves and Electronics"
code. P35030200

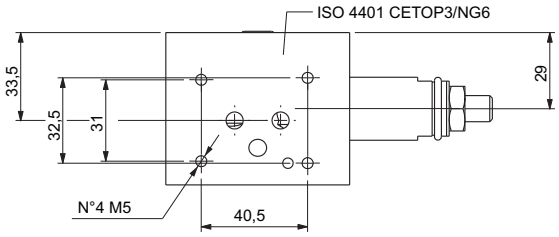

C = Grub screw
M = Plastic knob

INLET MODULE UNITS WITH PRESSURE RELIEF VALVE AND ELECTRICAL VENTING VALVE

Module units FE10P with CMP10 adjustable pressure relief valve and electrical venting valve CRP0418NA normally open supplied with emergency control.

- Manual adjustment with a grub screw or plastic knob.
- Threaded ports P-T sizes G3/8" or 9/16"-18UNF.
- Pressure gauge M, G1/4"
- Maximum flow 40 l/min.
- Aluminum body.

Connector to be ordered separately, see page 105.

HYDRAULIC SYMBOL

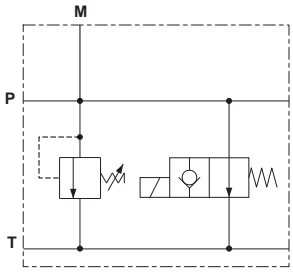

ORDERING CODE

FE10	Inlet module unit with pressure relief valve
P	Electric venting valve
3	Size
*	Port sizes: **1** = G3/8" **2** = 9/16"-18UNF
*	Adjustment: **M** = Plastic knob **C** = Grub screw
*	Setting ranges **1** = max. 50 bar (white spring) **2** = max. 150 bar (yellow spring) **3** = max. 320 bar** (green spring)
*	Voltage for the electric venting valve (Tab. 1)
**	**S1** = No variants **SV** = Viton **PY** = Push button emergency (see page 22) **PS** = Rotary emergency (see page 22) **AJ** = AMP Junior connection (see page 106) **CX** = Deutsch connection with bidirectional diode (see page 106)
2	Serial No.

(**) Setting referred to the maximum pressure reached from the relief valve. Do not exceed the maximum working pressure 250 bar.

FEATURES

Max. operating pressure	250 bar
Max. Flow	40 l/min
Hydraulic fluid	DIN 51524 Mineral oils
Fluid viscosity	10 ÷ 500 mm^2/s
Fluid temperature	-25°C ÷ 75°C
Ambient temperature	-25°C ÷ 60°C
Max. contamination level (filter $ß_{25} \geq 75$)	ISO 4406:1999: class 21/19/16 NAS 1638: class 10
Weight	1.1 kg

Pressure relief valve (CMP10...)	
Setting range (*):	
Spring 1	max 50 bar
Spring 2	max 150 bar
Spring 3	max 320 bar

Electrical venting valve (CRP04..NA..)	
Max. excitation frequency	2 Hz
Duty cycle	100% ED
Type of protection (in relation to the connector usad)	IP65

(*) The minimum permissible setting pressure depending on the spring: see curves.

Tab.1 - Voltage - Coil 18W/22W (1)

L	12 VDC
M	24 VDC
N	48 VDC
2	21.6 VDC
Z (2)	102 VDC RAC
X (3)	205 VDC RAC
W (4)	Without coil

(1) Connector to be ordered separately, see page 105;
Coils technical data, see page 106;
(2) With rectifier: 115 VAC/50Hz - 120 VAC/60Hz
(3) With rectifier: 230 VAC/50Hz - 240 VAC/60Hz
(4) Performance are guaranteed only using valves completed with coil

DIAGRAMS - PRESSURE RELIEF VALVE

PRESSURE-FLOW RATE

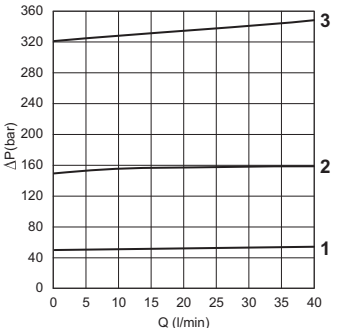

MIN.SETTING PRESSURE

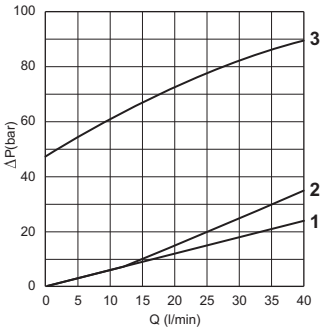

1 = max 50 bar
2 = max 150 bar
3 = max 320 bar

Fluid used: mineral based oil with viscosity 46 mm²/s at 40°C.

DIAGRAMS - ELECTRICAL VENTING VALVE

PRESSURE DROPS

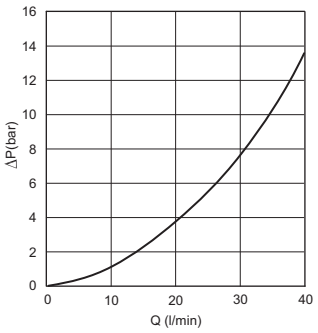

LIMITS OF USE

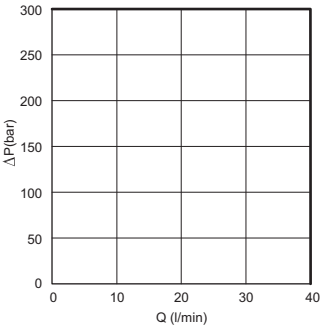

Fluid used: mineral based oil with viscosity 46 mm²/s at 40°C.

OVERALL DIMENSIONS

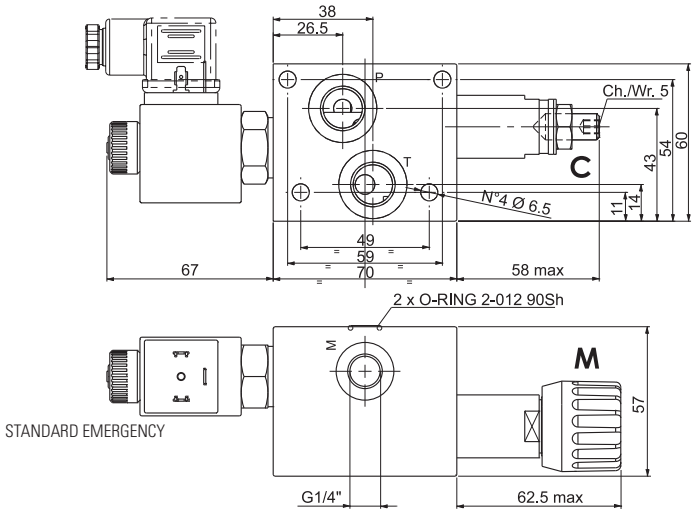

C = Grub screw
M = Plastic knob

VARIANTS

"PS"
Emergency rotary

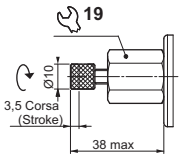

"PY"
Emergency with push button

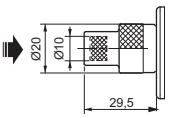

"AJ"
AMP Junior

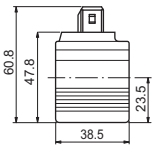

"CX"
Deutsch with diode

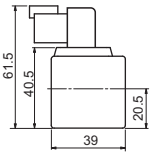

INLET MODULE UNITS WITH SIDE PORTS, PRESSURE RELIEF VALVE AND ELECTRICAL VENTING VALVE

Inlet module units FE10PS with side ports, CMP10 adjustable pressure relief valve and electrical venting valve CRP0418NA normally open supplied with emergency control.

- Manual adjustment with a grub screw or plastic knob.
- Threaded ports P-T sizes G3/8"
- Pressure gauge M, G1/4"
- Maximum flow 40 l/min.
- Aluminum body.

Connector to be ordered separately, see page 105.

HYDRAULIC SYMBOL

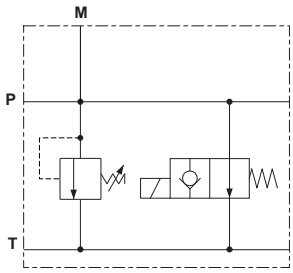

ORDERING CODE

FE10	Inlet module unit with pressure relief valve
PS	Electric venting valve and side ports
3	Size
*	Port sizes: **1** = G3/8"
*	Adjustment: **M** = Plastic knob **C** = Grub screw
*	Setting ranges **1** = max. 50 bar (white spring) **2** = max. 150 bar (yellow spring) **3** = max. 320 bar** (green spring)
*	Voltage for the electric venting valve (Tab. 1)
**	**S1** = No variants **SV** = Viton **PY** = Push button emergency (see page 22) **PS** = Rotary emergency (see page 22) **AJ** = AMP Junior connection (see page 106) **CX** = Deutsch connection with bidirectional diode (see page 106)
2	Serial No.

(**) Setting referred to the maximum pressure reached from the relief valve. Do not exceed the maximum working pressure 250 bar.

FEATURES

Max. operating pressure	250 bar
Max. Flow	40 l/min
Hydraulic fluid	DIN 51524 Mineral oils
Fluid viscosity	10 ÷ 500 mm^2/s
Fluid temperature	-25°C ÷ 75°C
Ambient temperature	-25°C ÷ 60°C
Max. contamination level (filter $ß_{25} \geq 75$)	ISO 4406:1999: class 21/19/16 NAS 1638: class 10
Weight	1.1 kg

Pressure relief valve (CMP10...)	
Setting range (*):	
Spring 1	max 50 bar
Spring 2	max 150 bar
Spring 3	max 320 bar

Electrical venting valve (CRP04..NA..)	
Max. excitation frequency	2 Hz
Duty cycle	100% ED
Type of protection (in relation to the connector usad)	IP65

(*) The minimum permissible setting pressure depending on the spring: see curves.

Tab.1 - Voltage - Coil 18W/22W (1)

L	12 VDC
M	24 VDC
N	48 VDC
2	21.6 VDC
Z (2)	102 VDC RAC
X (3)	205 VDC RAC
W (4)	Without coil

(1) Connector to be ordered separately, see page 105;
Coils technical data, see page 106;
(2) With rectifier: 115 VAC/50Hz - 120 VAC/60Hz
(3) With rectifier: 230 VAC/50Hz - 240 VAC/60Hz
(4) Performance are guaranteed only using valves completed with coil

DIAGRAMS - PRESSURE RELIEF VALVE

PRESSURE-FLOW RATE

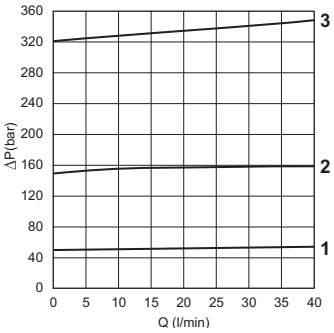

MIN.SETTING PRESSURE

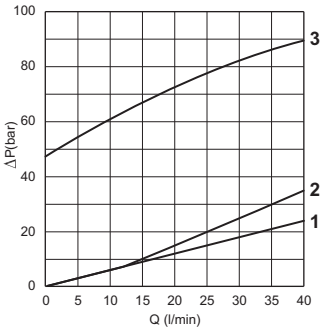

1 = max 50 bar
2 = max 150 bar
3 = max 320 bar

Fluid used: mineral based oil with viscosity 46 mm²/s at 40°C.

DIAGRAMS - ELECTRICAL VENTING VALVE

PRESSURE DROPS

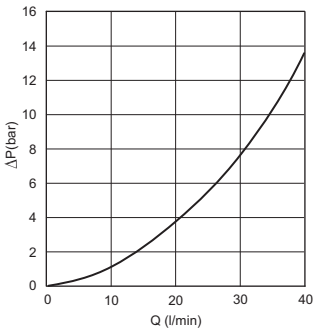

LIMITS OF USE

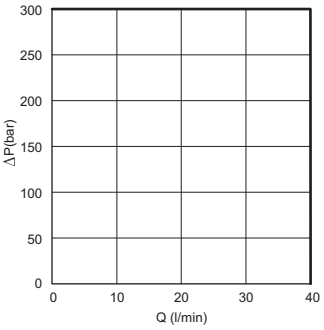

Fluid used: mineral based oil with viscosity 46 mm²/s at 40°C.

OVERALL DIMENSIONS

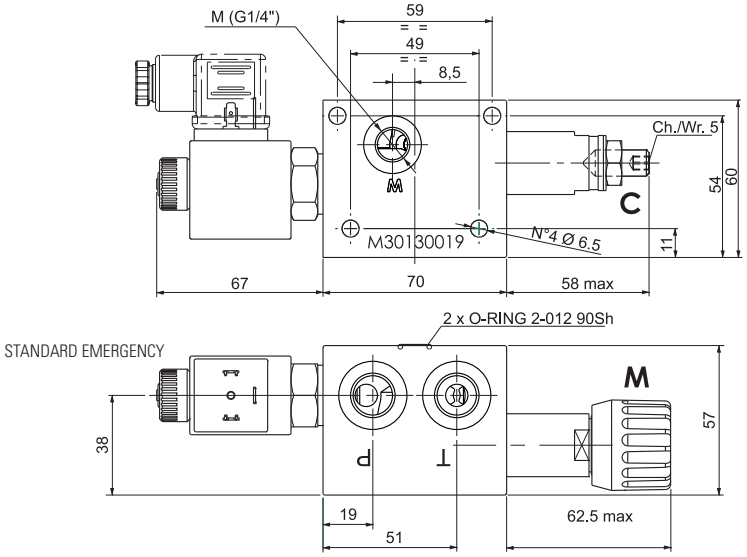

C = Grub screw
M = Plastic knob

VARIANTS

"PS"
Emergency rotary

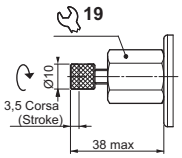

"PY"
Emergency with push button

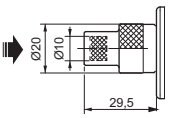

"AJ"
AMP Junior

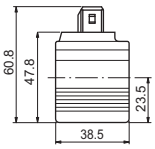

"CX"
Deutsch with diode

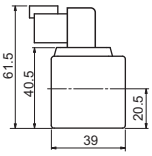

DIRECTIONAL CONTROL BANKABLE VALVE WITH A09 COILS

Directional control bankable valve CDC3 with single or double solenoid.

- Centring achieved by means of calibrated length springs which immediately reposition the spool in the neutral position when the electrical signal is shut off.
- Different springs used for each spool to improve the valve performance.
- Emergency control.
- Body for parallel or series connections
- Threaded ports sizes G3/8" or 9/16"-18UNF (SAE 6), with or without LS line.
- Coils protection IP65
- Power supply DC or AC (with rectifier).
- Standard connectors DIN 43650 ISO 4400, AMP Junior, flying leads and Deutsch
- Maximum flow until 30 l/min.
- Cast iron zinc plated body.

Connector to be ordered separately, see page 105.

ORDERING CODE

CDC	Directional control bankable valve (with A09 coil)
3	Size
*	Body type (tab. 1)
E	Electrical operator
**	Spool (tab.2)
*	Mounting (tab.3)
*	Voltage (tab.4)
**	Variants (tab.5)
2	Serial No.

Calibrated diaphragms on P line, see page 104.

FEATURES

Max. pressure ports P/A/B/T	250 bar
Max. Flow	30 l/min
Max excitation frequency	3 Hz
Duty cycle	100% ED
Hydraulic fluid	DIN 51524 Mineral oils
Fluid viscosity	10 ÷ 500 mm^2/s
Fluid temperature	-25°C ÷ 75°C
Ambient temperature	-25°C ÷ 60°C
Max. contamination level (filter $ß_{25} \geq 75$)	ISO 4406:1999: class 21/19/16 NAS 1638: class 10
Weight with one DC solenoid Weight with two DC solenoids	1.25 kg 1.50 kg

ORDERING CODE

Tab.1 - Body type

Code	Body
A	Ports G3/8" parallel
B	Ports 9/16" - 18UNF parallel
D (1)	Ports G3/8" series
E (1)	Ports 9/16" - 18UNF series
G	Attachment style Parallel presetting for modular valves
H (1)	Attachment style Series presetting for modular valves
I	Ports 9/16" - 18UNF parallel - LS vers.
L	Ports G3/8" parallel - LS vers.
M	Attachment style, parallel-LS vers. Presetting for modular valves
S	Special connection B-P-A (see outlet module unit FUS3 pag .55)
U	Ports G3/8" parallel - P-T closed (not require the outlet module units)

Tab.2 - Standard spools

Two solenoids,spring centred "C" Mounting			
Code	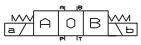	Covering	Transient position
01		+	
02		-	
03		+	
04 (2)	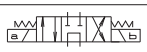	-	

One solenoid, side A "E" Mounting			
Code	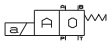	Covering	Transient position
01		+	
02		-	
03		+	
04 (2)	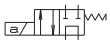	-	
15		-	
16		+	

One solenoid, side B "F" Mounting			
Code	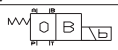	Covering	Transient position
01	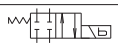	+	
02		-	
03	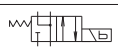	+	
04 (2)		-	
15		-	
16		+	

Tab.3 - Mounting

Code	Symbol
C	
E	
F	
G (2)	
H (2)	

Tab.4 - Coils A09 voltage (7)

Code	Voltage	Max. winding temperature (Ambient temperature 25°C)	Rated power W	Resistance @ 20°C (Ohm) ±7%
L	12 Vdc	123 °C	27	5.3
M	24 Vdc	123 °C	27	21.3
N (3)	48 Vdc	123 °C	27	85.3
Z (4)	102 Vdc	123 °C	27	392
P (3)	110 Vdc	123 °C	27	448
X (5)	205 Vdc	123 °C	27	1577
W (6)	Without coils			

Tab.5 - Variants (7-8)

Code	Variant
S1	No variant
SV	Viton
LF (11)	Emergency control lever (see page 34)
LR	Emergency control lever 180° rotated (see page 34)
ES	Emergency button (see page 34)
P2 (9)	Rotary emergency button (see page 34)
R5 (9)	Rotary emergency b. 180° (see page 34)
3T	First elem. for series connec.
AJ (10)	AMP Junior connection (see page 107)
FL (10)	Coil with flying leads 250 mm (see page 107)
LD (10)	Coil with flying leads 130 mm and integrated diode (see page 107)
CX (10)	Deutsch connecection with bidirectional diode (see page 107)

(1) For series connection configuration, a special individual bankable valve CDC3*E04**3T2 (A B or G parallel body type only, with spool 04 type, 3T variant) must always be used as first element. For other individual bankable valve must use body D E or H connector series type with spool 04 only.
(2) Specials with price increasing
(3) Special voltage
(4) Require connector with rectifier: 115 VAC/50Hz - 120 VAC/60Hz
(5) Require connector with rectifier: 230 VAC/50Hz - 240 VAC/60Hz
(6) Performance are guaranteed only using valves completed with coil
(7) Connector to be ordered separately, see page 105;
Coils technical data, see page 107;
Voltage codes are not stamped on the plate, their are readable on the coils
(8) Other variants available on request
(9) Tightening torque max. 6÷9 Nm (CH n. 22)
(10) Available in 12V or 24V DC voltage only
(11) For the body type G - H - M order LR variant (Emergency control lever180° rotated)

HYDRAULIC SYMBOLS

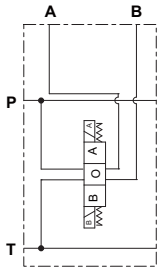

CDC3 A ... CDC3 B ...

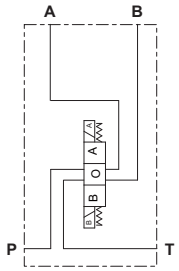

CDC3 D ... CDC3 E ...

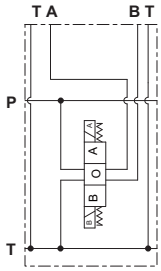

CDC3 G ...

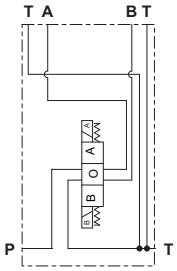

CDC3 H ...

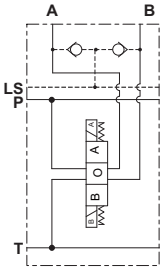

CDC3 I ...
CDC3 L ...

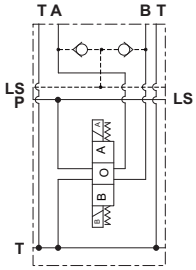

CDC3 M ...

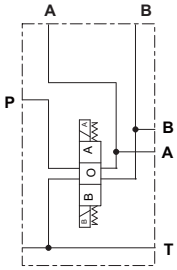

CDC3 S ...

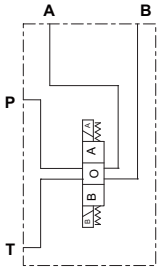

CDC3 U ...

HYDRAULIC SYMBOLS AND INSTRUCTION OF CONNECTION

PARALLEL CONNECTION

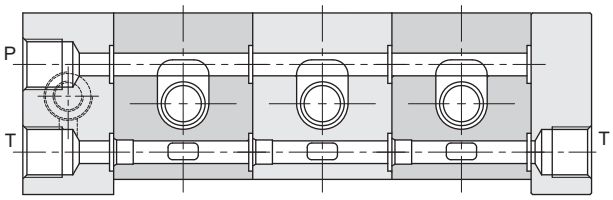

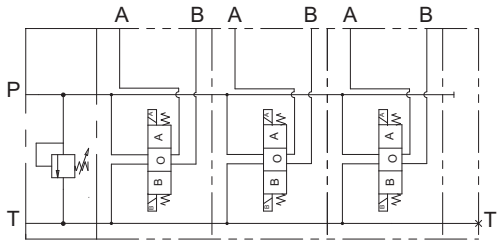

SERIES CONNECTION

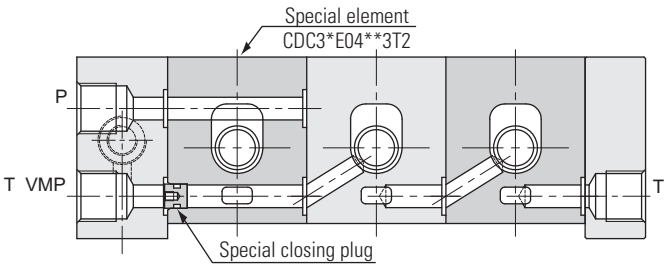

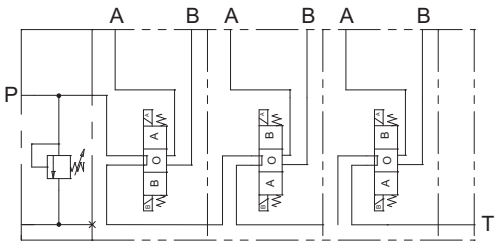

For series connection configuration, a special individual valve bank section (CDC3*E04**3T2) must always be used as first element (see ordering code page 25).

PRESSURE DROPS - DIRECTIONAL CONTROL BANKABLE VALVE

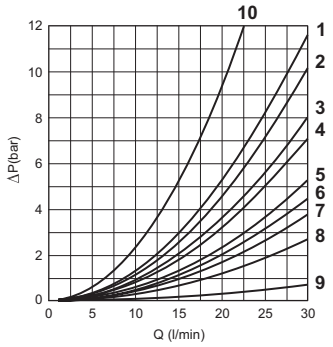

Spool type	Connections					
	P → A	P → B	A → T	B → T	P → T	P/T passing
01	4	4	4	4	—	9
02 (p)	7	7	6	6	7	9
02 (s)	7	7	6	6	8	—
03	4	4	6	6	—	9
04 (p)	2	2	1	1	5	9
04 (s)	2	2	1	1	3	—
15-16 (E)	6	6	10	10	—	9
15-16 (F)	6	6	5	5	—	9
	Curve No.					

The diagram at the side shows the pressure drop curves for spools during normal usage.
The fluid used is a mineral oil with a viscosity of 46 mm²/s at 40 C°; the tests have been carried out at a fluid temperature of 40 C°.

(p) Parallel connections
(s) Series connections
(E) Mounting E
(F) Mounting F

LIMITS OF USE (MOUNTING C-E-F)

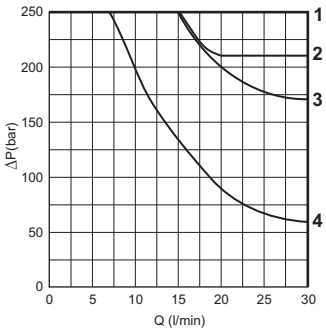

Spool type	Curve No.
01	1
02	1
03	3
04	2
15-16	1 (4)

(4) = 15 and 16 spools used as 2 or 3 way, follow the curve No. 4

The tests have been carried out with solenoids at operating temperature and a voltage 10% less than rated voltage with a fluid temperature of 50 C°. The fluid used was a mineral oil with a viscosity of 46 mm²/s at 40 degrees C. The values in the diagram refer to tests carried out with the oil flow in two directions simultaneously (e.g. from P to A and at the same time B to T).

In the cases where valves 4/2 and 4/3 are used with the flow in one direction only, the limits of use could have variations which may even be negative (See curve No 4 and Spool No 16 used as 2 or 3 ways). The tests were carried out with a counter-pressure of 2 bar at T port.

NOTE: The limits of use are valid for the C, E, F mounting.

OVERALL DIMENSIONS

Parallel body

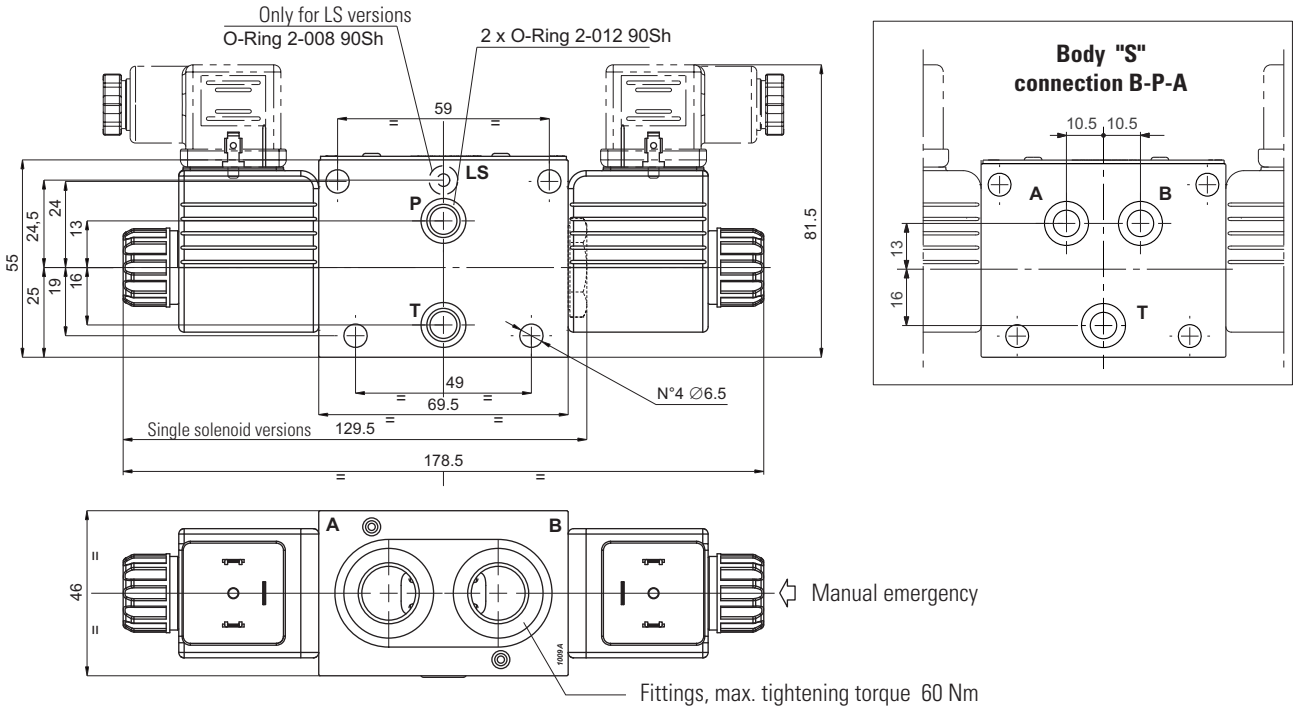

Parallel body
Presetting for modular valves

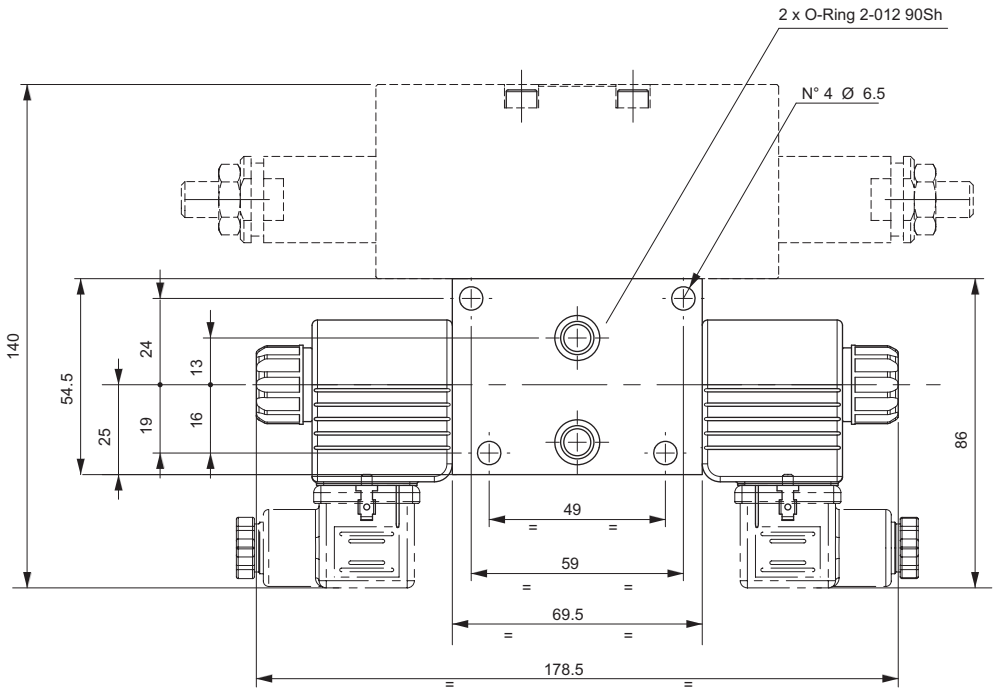

DIRECTIONAL CONTROL BANKABLE VALVE WITH PRESSURE RELIEF VALVE AND A09 COILS

Connector to be ordered separately, see page 105.

Directional control bankable valve CDCM3 with single or double solenoid and one or two pressure relief valves with adjustable setting on A and/or B.

- Centring achieved by means of calibrated length springs which immediately reposition the spool in the neutral position when the electrical signal is shut off.
- Different springs used for each spool to improve the valve performance.
- Emergency control.
- Body for parallel or series connections
- Threaded ports sizes G3/8"
- Coils protection IP65
- Power supply DC or AC (with rectifier).
- Standard connectors DIN 43650 ISO 4400, AMP Junior, flying leads and Deutsch
- Maximum flow until 30 l/min.
- Cast iron zinc plated body.

ORDERING CODE

CDCM	Directional control bankable valve with relief valve (A09 coil)
3	Size
*	Body type (tab. 1)
E	Electrical operator
**	Spool (tab.2)
*	Mounting (tab.3)
*	Voltage (tab.4)
*	Pressure relief valve setting on A (tab. 5)
*	Pressure relief valve setting on B (tab. 5, omitted if equal to A)
**	Variants (tab.6)
3	Serial No.

Calibrated diaphragms on P line, see page 104.

FEATURES

Max. pressure ports P/A/B/T	250 bar
Max. flow	30 l/min
Max. flow - Pressure relief valve	see diagrams page 32
Max excitation frequency	3 Hz
Duty cycle	100% ED
Hydraulic fluid	DIN 51524 Mineral oils
Fluid viscosity	10 ÷ 500 mm^2/s
Fluid temperature	-25°C ÷ 75°C
Ambient temperature	-25°C ÷ 60°C
Max. contamination level (filter $ß_{25} \geq 75$)	ISO 4406:1999: class 21/19/16 NAS 1638: class 10
Weight with one DC solenoid Weight with two DC solenoids	1.40 kg 1.65 kg

HYDRAULIC SYMBOLS

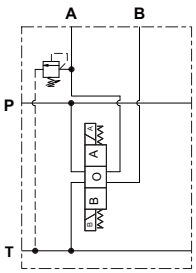

CDCM3 O ..

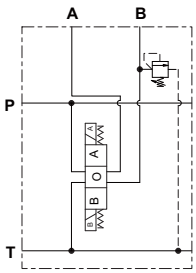

CDCM3 P ..

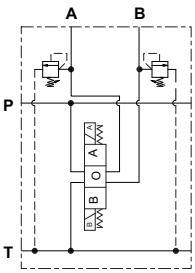

CDCM3 N ..

ORDERING CODE

Tab.1 - Body type

Code	Body
O	Ports G3/8" parallel with relief valve on A
P	Ports G3/8" parallel with relief valve on B
N	Ports G3/8" parallel with relief valve on A and B

Tab.2 - Standard spools

Two solenoids,spring centred "C" Mounting

Code		Covering	Transient position
01		+	
02		-	
03		+	
04 (1)		-	

One solenoid, side A "E" Mounting

Code		Covering	Transient position
01		+	
02		-	
03		+	
04 (1)		-	
15		-	
16		+	

One solenoid, side B "F" Mounting

Code		Covering	Transient position
01		+	
02		-	
03		+	
04 (1)		-	
15		-	
16		+	

Tab.3 - Mounting

Code	Symbol
C	
E	
F	
G (1)	
H (1)	

Tab.4 - Coils A09 voltage (6)

Code	Voltage	Max. winding temperature (Ambient temperature 25°C)	Rated power W	Resistance @ 20°C (Ohm) ±7%
L	12 Vdc	123 °C	27	5.3
M	24 Vdc	123 °C	27	21.3
N (2)	48 Vdc	123 °C	27	85.3
Z (3)	102 Vdc	123 °C	27	392
P (2)	110 Vdc	123 °C	27	448
X (4)	205 Vdc	123 °C	27	1577
W (5)	Without coils			

Tab.5 - Pressure relief valve settings (7)

Code	Setting
0	1 ÷ 30 bar
1	31 ÷ 100 bar
2	101 ÷ 250 bar

Tab.6 - Variants (6-8)

Code	Variant
S1	No variant
LF	Emergency control lever (see page 34)
ES	Emergency button (see page 34)
P2 (9)	Rotary emergency button (see page 34)
R5 (9)	Rotary emergency b. 180° (see page 34)
AJ (10)	AMP Junior connection (see page 107)
FL (10)	Coil with flying leads 250 mm (see page 107)
LD (10)	Coil with flying leads 130 mm and integrated diode (see page 107)
CX (10)	Deutsch connecection with bidirectional diode (see page 107)

(1) Specials with price increasing
(2) Special voltage
(3) Require connector with rectifier: 115 VAC/50Hz - 120 VAC/60Hz
(4) Require connector with rectifier: 230 VAC/50Hz - 240 VAC/60Hz
(5) Performance are guaranteed only using valves completed with coil
(6) Connector to be ordered separately, see page 105;
Coils technical data, see page 107;
Voltage codes are not stamped on the plate, their are readable on the coils
(7) Other settings available on request
(8) Other variants available on request
(9) Tightening torque max. 6÷9 Nm (CH n. 22)
(10) Available in 12V or 24V DC voltage only

HYDRAULIC SYMBOLS AND INSTRUCTION OF CONNECTION

PARALLEL CONNECTION

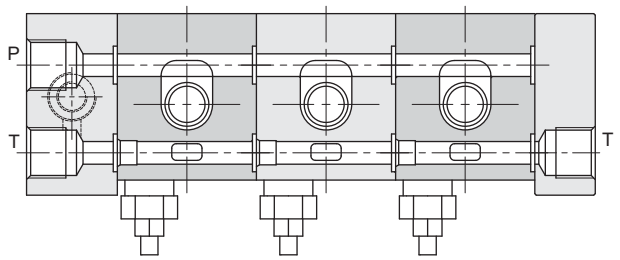

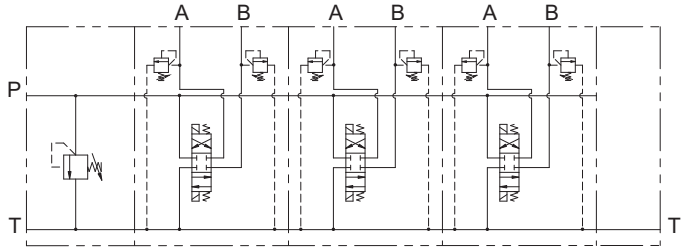

DIAGRAMS - PRESSURE RELIEF VALVES

MAX PRESSURE SETTING

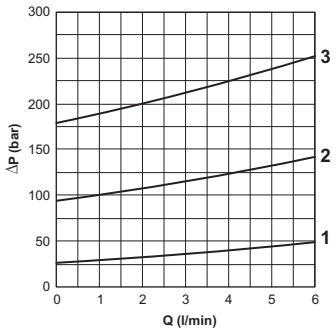

MIN.SETTING PRESSURE

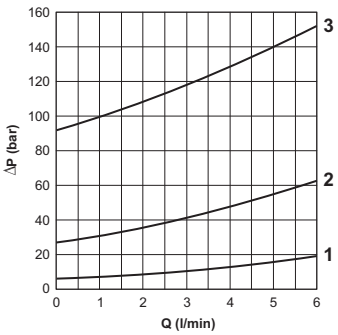

1 = 1 ÷ 30 barbar
2 = 31 ÷ 100 bar
3 = 101 ÷ 250 bar

Fluid used: mineral based oil with viscosity 46 mm²/s at 40°C.

PRESSURE DROPS - DIRECTIONAL CONTROL BANKABLE VALVE

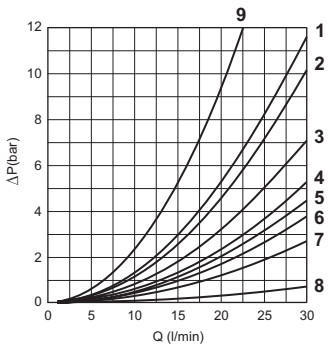

Spool type	Connections					
	P → A	P → B	A → T	B → T	P → T	P/T passing
01	3	3	3	3	—	8
02 (p)	6	6	5	5	6	8
03	3	3	5	5	—	8
04 (p)	2	2	1	1	4	8
15-16 (E)	5	5	9	9	—	8
15-16 (F)	5	5	4	4	—	8
	Curve No.					

The diagram at the side shows the pressure drop curves for spools during normal usage.
The fluid used is a mineral oil with a viscosity of 46 mm²/s at 40 C°; the tests have been carried out at a fluid temperature of 40 C°.

(p) Parallel connections
(s) Series connections
(E) Mounting E
(F) Mounting F

LIMITS OF USE (MOUNTING C-E-F)

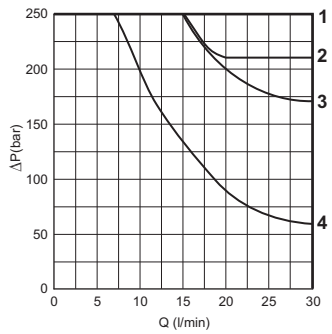

Spool type	Curve No.
01	1
02	1
03	3
04	2
15-16	1 (4)

The tests have been carried out with solenoids at operating temperature and a voltage 10% less than rated voltage with a fluid temperature of 50 C°. The fluid used was a mineral oil with a viscosity of 46 mm²/s at 40 degrees C. The values in the diagram refer to tests carried out with the oil flow in two directions simultaneously (e.g. from P to A and at the same time B to T).

In the cases where valves 4/2 and 4/3 are used with the flow in one direction only, the limits of use could have variations which may even be negative (See curve No 4 and Spool No 16 used as 2 or 3 ways). The tests were carried out with a counter-pressure of 2 bar at T port.

NOTE: The limits of use are valid for the C, E, F mounting.

(4) = 15 and 16 spools used as 2 or 3 way, follow the curve No. 4

OVERALL DIMENSIONS

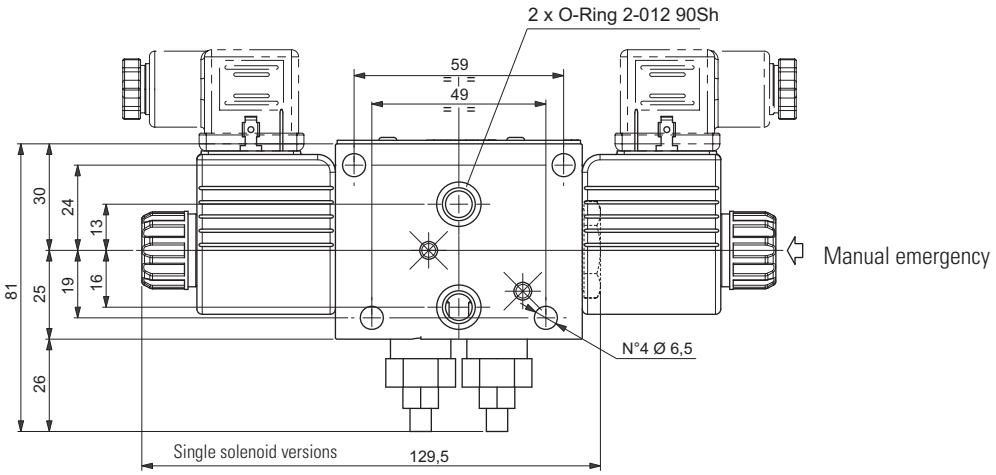

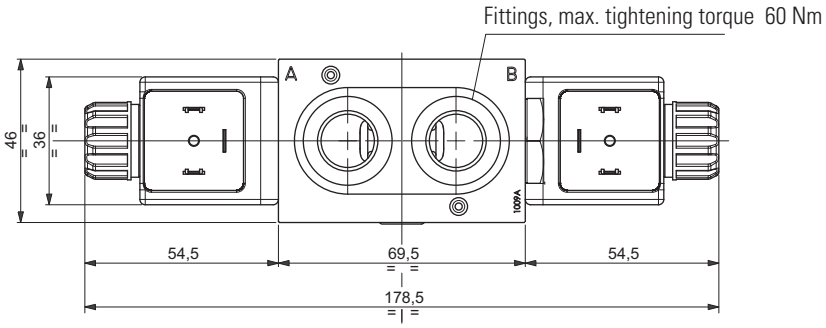

"LF" AND "LR" VARIANTS - EMERGENCY CONTROL LEVER

Thanks to his flexibility, the component is designed to be inserted between the valve body and the spool, providing total interchangeability between the different types of solenoid body valves manufactured by Dana Brevini. The control can be used as an emergency device in the event of power cuts.

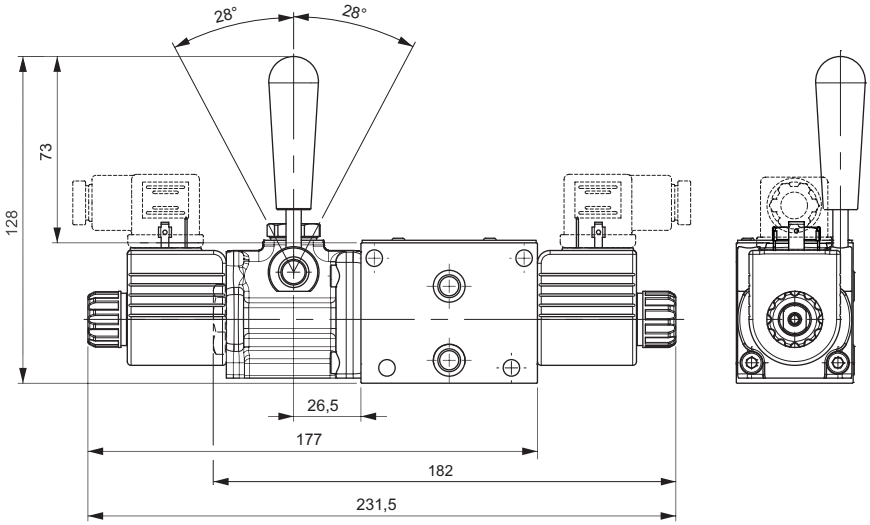

LF variant

HYDRAULIC SYMBOL

Max operating pressure port T	dynamic	160 bar
	static	210 bar
Max operating pressure port P for series connection configuration		160 bar
Mounting type		C - F - H
Spools type		01 - 02 04 - 16
Weight with single solenoid	CDC3	2.21 kg
	CDCM3	2.36 kg
Weight with double solenoid	CDC3	2.46 kg
	CDCM3	2.61 kg

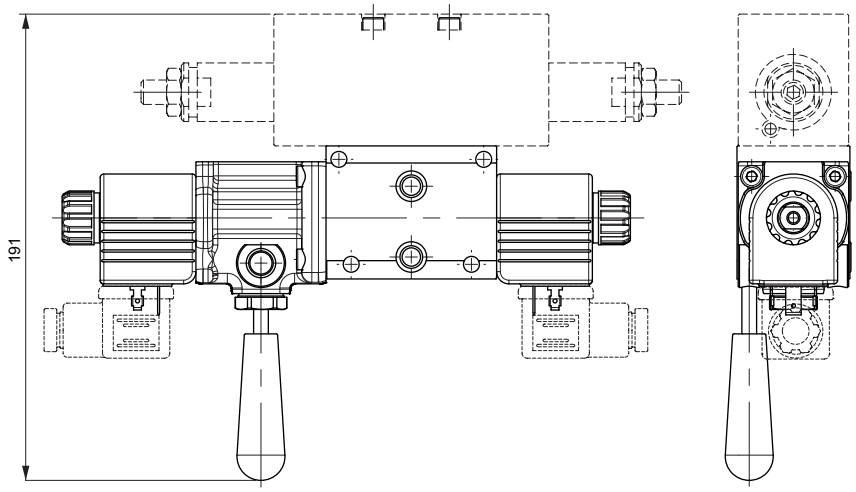

LR variant

OTHER VARIANTS

"ES"
Manual emergency

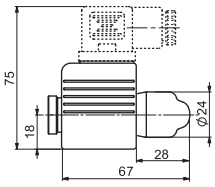

"P2"
Rotary emergency

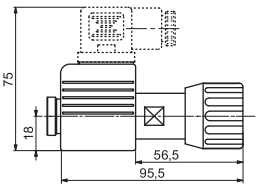

"R5"
Rotary emergency 180°

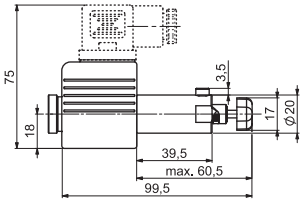

"AJ"
AMP Junior

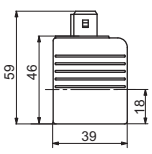

"CX"
Deutsch with diode

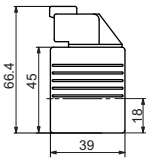

"FL" Flying leads
"LD" Flying leads/diode

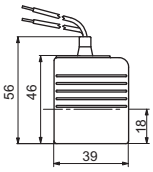

Emergency P2 and P5, tightening torque max. 6÷9 Nm (CH n. 22)

DIRECTIONAL CONTROL BANKABLE VALVE WITH D15 COILS

Directional control bankable valve CD3 with single or double solenoid.

- Centring achieved by means of calibrated length springs which immediately reposition the spool in the neutral position when the electrical signal is shut off.
- Different springs used for each spool to improve the valve performance.
- Emergency control.
- Body for parallel or series connections
- Threaded ports sizes G3/8" or 9/16"-18UNF (SAE 6), with or without LS line.
- Coils protection IP66
- Power supply DC or AC (with rectifier).
- Standard connectors DIN 43650 ISO 4400, AMP Junior, flying leads and Deutsch
- Maximum flow until 40 l/min.
- Cast iron zinc plated body.

Connector to be ordered separately, see page 105.

ORDERING CODE

CD	Directional control bankable valve (with D15 coil)
3	Size
*	Body type (tab. 1)
E	Electrical operator
**	Spool (tab.2)
*	Mounting (tab.3)
*	Voltage (tab.4)
**	Variants (tab.5)
2	Serial No.

Calibrated diaphragms on P line, see page 104.

FEATURES

Max. pressure ports P/A/B/T	310 bar
Max. pressure port T	250 bar
Max. Flow	40 l/min
Max excitation frequency	3 Hz
Duty cycle	100% ED
Hydraulic fluid	DIN 51524 Mineral oils
Fluid viscosity	10 ÷ 500 mm^2/s
Fluid temperature	-25°C ÷ 75°C
Ambient temperature	-25°C ÷ 60°C
Max. contamination level (filter $ß_{25} \geq 75$)	ISO 4406:1999: class 21/19/16 NAS 1638: class 10
Weight with one DC solenoid Weight with two DC solenoids	1.389 kg 1.778 kg

ORDERING CODE

Tab.1 - Body type

Code	Body
A	Ports G3/8" parallel
B	Ports 9/16" - 18UNF parallel
D (1)	Ports G3/8" series
E (1)	Ports 9/16" - 18UNF series
G	Attachment style Parallel presetting for modular valves
H (1)	Attachment style Series presetting for modular valves
I	Ports 9/16" - 18UNF parallel - LS vers.
L	Ports G3/8" parallel - LS vers.
M	Attachment style, parallel-LS vers. Presetting for modular valves
S	Special connection B-P-A (see outlet module unit FUS3 pag .55)
U	Ports G3/8" parallel - P-T closed (not require the outlet module units)

Tab.2 - Standard spools

Two solenoids,spring centred "C" Mounting			
Code	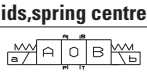	Covering	Transient position
01		+	
02		-	
03		+	
04 (2)		-	

One solenoid, side A "E" Mounting			
Code	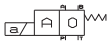	Covering	Transient position
01		+	
02		-	
03		+	
04 (2)	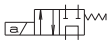	-	
15		-	
16		+	

One solenoid, side B "F" Mounting			
Code	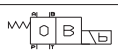	Covering	Transient position
01	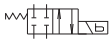	+	
02	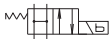	-	
03	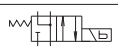	+	
04 (2)		-	
15		-	
16		+	

Tab.3 - Mounting

Code	Symbol
C	
E	
F	
G (2)	
H (2)	

Tab.4 - Coils D15 voltage (7)

Code	Voltage	Max. winding temperature (Ambient temperature 25°C)	Rated power W	Resistance @ 20°C (Ohm) ±10%
L	12 Vdc	110 °C	30	4.8
M	24 Vdc	110 °C	30	18.8
V (3)	28 Vdc	110 °C	30	25.6
N (3)	48 Vdc	110 °C	30	75.2
Z (4)	102 Vdc	110 °C	30	340
P (3)	110 Vdc	110 °C	30	387
X (5)	205 Vdc	110 °C	30	1375
W (6)	Without coils			

Tab.5 - Variants (7-8)

Code	Variant
S1	No variant
SV	Viton
LF (12)	Emergency control lever (see page 40)
LR	Emergency control lever180° rotated (see page 40)
ES	Emergency button (see page 40)
P2 (9)	Rotary emergency button (see page 40)
R5 (9)	Rotary emergency b. 180° (see page 40)
3T	First elem. for series connec.
AJ (10)	AMP Junior connection (see page 108)
AD (10)	AMP Junior and integr diode (see page 108)
SL (10)	Coil with flying leads 175 mm (see page 108)
CZ (10)	Deutsch DT04-2P connection (see page 109)
CX (10)	Deutsch DT04-2P connection and integr diode (see page 109)
R6 (10)	Deutsch DT04-2P connection eCoat surface treatment (see page 109)
RS (11)	Hirschmann coil eCoat surface treatment (see page 109)

(1) For series connection configuration, a special individual bankable valve CD3*E04**3T2 (A B or G parallel body type only, with spool 04 type, 3T variant) must always be used as first element. For other individual bankable valve must use body D E or H connector series type with spool 04 only
(2) Specials with price increasing
(3) Special voltage
(4) Require connector with rectifier: 115 VAC/50Hz - 120 VAC/60Hz
(5) Require connector with rectifier: 230 VAC/50Hz - 240 VAC/60Hz
(6) Performance are guaranteed only using valves completed with coil
(7) Connector to be ordered separately, see page 105;
Coils technical data, see page 108 - 109;
Voltage codes are not stamped on the plate, their are readable on the coils
(8) Other variants available on request
(9) Tightening torque max. 6÷9 Nm (CH n. 22)
(10) Available in 12V or 24V DC voltage only.
(11) Available in 12V, 24V, 28V or 110V DC voltage only
(12) For the body type G - H - M order LR variant (Emergency control lever180° rotated)

HYDRAULIC SYMBOLS

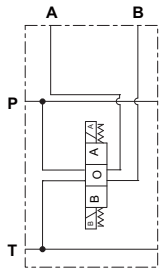

CD3 A ... CD3 B ...

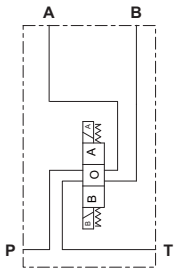

CD3 D ... CDC3 E ...

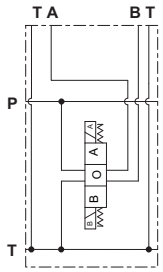

CD3 G ...

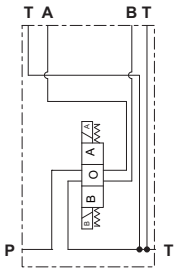

CD3 H ...

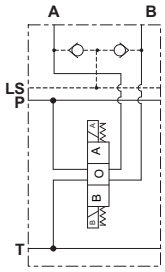

CD3 I ...
CD3 L ...

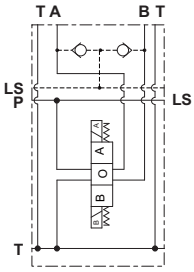

CD3 M ...

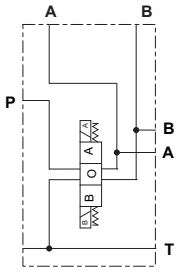

CDC3 S ...

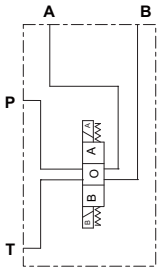

CDC3 U ...

HYDRAULIC SYMBOLS AND INSTRUCTION OF CONNECTION

PARALLEL CONNECTION

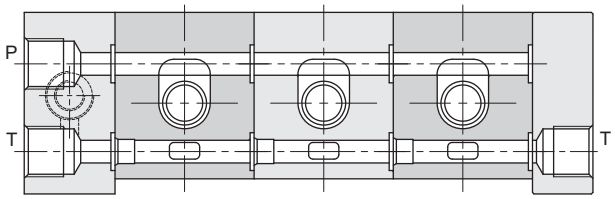

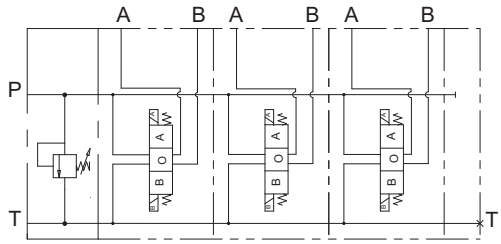

SERIES CONNECTION

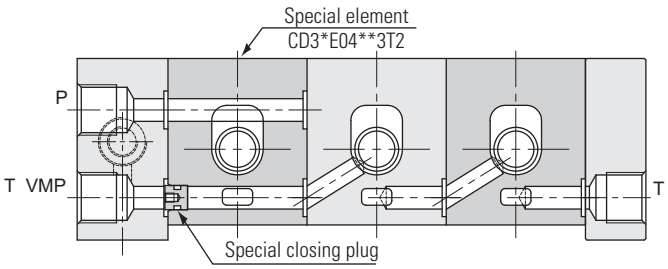

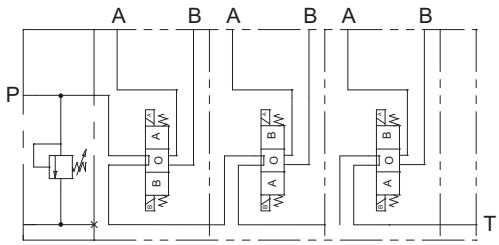

For series connection configuration, a special individual valve bank section (CD3*E04**3T2) must always be used as first element (see ordering code page 35).

PRESSURE DROPS - DIRECTIONAL CONTROL BANKABLE VALVE

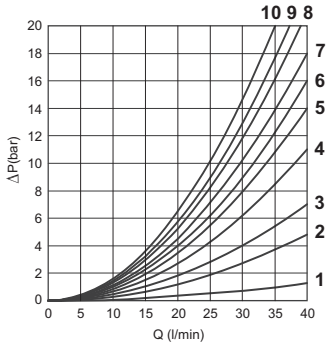

Spool type	Connections					
	P → A	P → B	A → T	B → T	P → T	P/T passing
01	6	6	6	6	—	1
02 (p)	5	5	4	4	2	1
02 (s)	5	5	5	5	3	—
03	6	6	5	5	—	1
04 (p)	9	10	8	8	4	1
04 (s)	9	9	8	8	5	—
15-16 (E)	5	7	5	9	—	1
15-16 (F)	7	5	9	5	—	1
	Curve No.					

The diagram at the side shows the pressure drop curves for spools during normal usage.
The fluid used is a mineral oil with a viscosity of 46 mm²/s at 40 C°; the tests have been carried out at a fluid temperature of 40 C°.

(p) Parallel connections
(s) Series connections
(E) Mounting E
(F) Mounting F

LIMITS OF USE (MOUNTING C-E-F)

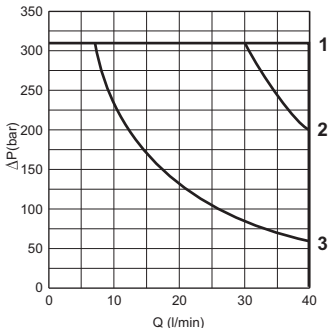

Spool type	Curve No.
01	1
02	1
03	1
04	2
15	3
16	1

(3) = 16 spools used as 2 or 3 way, follow the curve No. 3

The tests have been carried out with solenoids at operating temperature and a voltage 10% less than rated voltage with a fluid temperature of 50 C°. The fluid used was a mineral oil with a viscosity of 46 mm²/s at 40 degrees C. The values in the diagram refer to tests carried out with the oil flow in two directions simultaneously (e.g. from P to A and at the same time B to T).

In the cases where valves 4/2 and 4/3 are used with the flow in one direction only, the limits of use could have variations which may even be negative (See curve No 3 and Spool No 16 used as 2 or 3 ways). The tests were carried out with a counter-pressure of 2 bar at T port.

NOTE: The limits of use are valid for the C, E, F mounting.

OVERALL DIMENSIONS

Parallel body

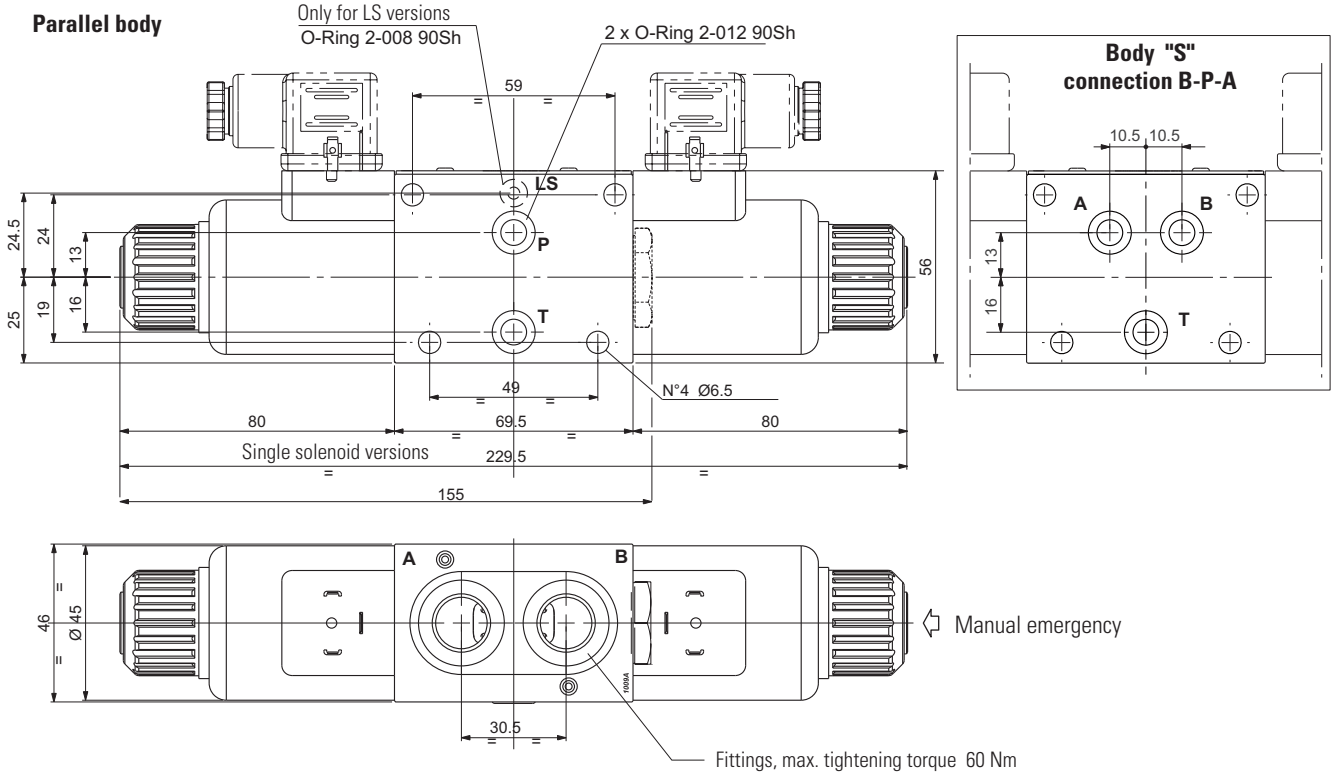

Parallel body
Presetting for modular valves

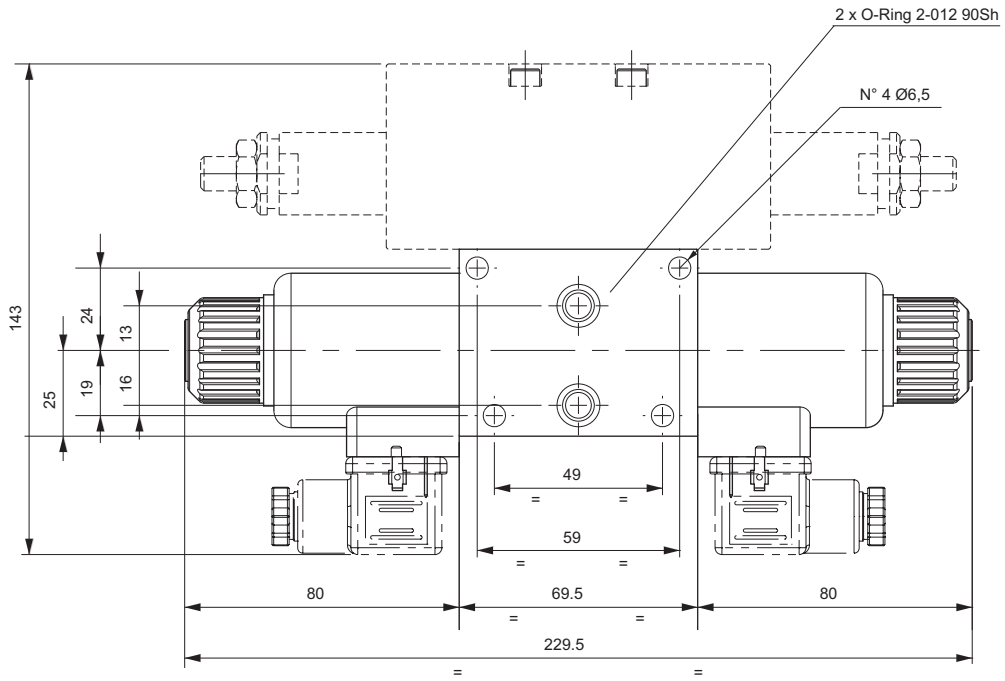

"LF" AND "LR" VARIANTS - EMERGENCY CONTROL LEVER

Thanks to his flexibility, the component is designed to be inserted between the valve body and the spool, providing total interchangeability between the different types of solenoid body valves manufactured by Dana Brevini. The control can be used as an emergency device in the event of power cuts.

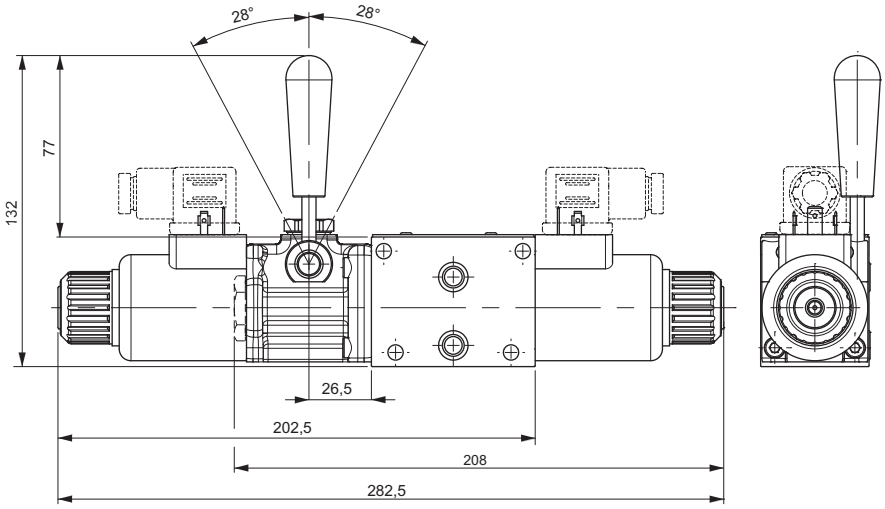

LF variant

HYDRAULIC SYMBOL

Max operating pressure port T	dynamic	160 bar
	static	210 bar
Max operating pressure port P for series connection configuration		160 bar
Mounting type		C - F - H
Spools type		01 - 02 - 03 04 - 16
Weight with single solenoid Weight with double solenoid		2.35 kg 2.74 kg

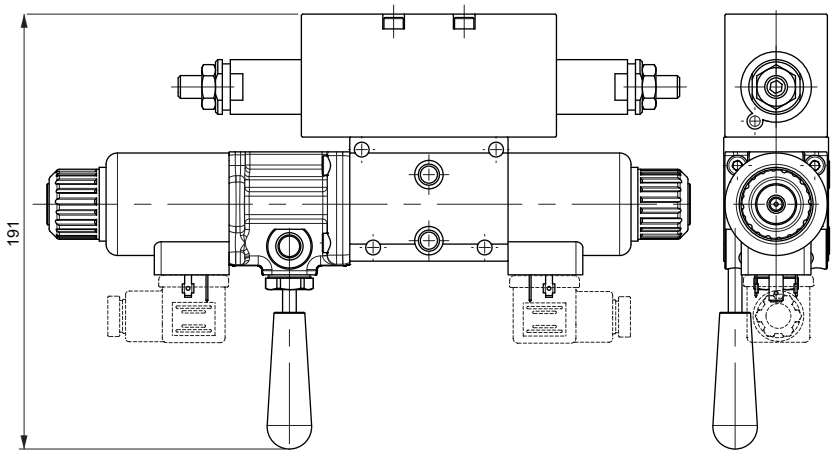

LR variant

OTHER VARIANTS

"ES"
Manual emergency

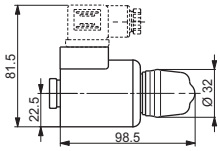

"P2"
Rotary emergency

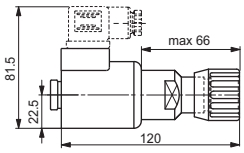

"R5"
Rotary emergency 180°

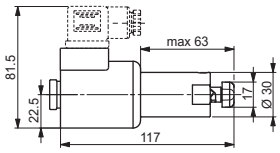

"AJ" AMP Junior
"AD" AMP Junior + Diode

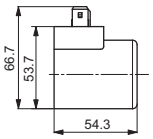

"CZ" Deutsch DT04-2P
"R6" Deutsch DT04-2P eCoat treatment

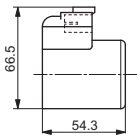

"SL"
Flying leads

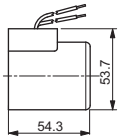

"RS"
eCoat treatment

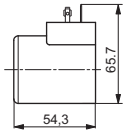

Emergency P2 and P5, tightening torque max. 6÷9 Nm (CH n. 22)

SOLENOID OPERATING PROPORTIONAL CONTROL BANKABLE VALVES

Connector to be ordered separately, see page 105.

Proportional control bankable valves CX3 with single or double solenoid.

- Emergency control.
- Body for parallel connections
- Threaded ports sizes G3/8" or 9/16"-18UNF (SAE 6), with or without LS line.
- Coils protection IP66
- Standard connectors DIN 43650 ISO 4400, AMP Junior, flying leads and Deutsch
- Regulated flow rate 3 / 10 / 15 / 20 l/min
- Cast iron zinc plated body.

FEATURES

Max. operating pressure ports P/A/B	310 bar
Max. operating pressure ports T (Pressure dynamic allowed for 2 millions of cycles)	250 bar
Nominal flow with Dp 5 bar from P to A,B	3 / 10 / 15 / 20 l/min
Relative duty cycle	Continuous 100% ED
Type of protection (Hirschmann coil)	IP 66
Fluid viscosity	10 ÷ 500 mm²/s
Fluid temperature	-20°C ÷ 75° C
Ambient temperature	-20°C ÷ 60°C
Max. contamination level (filter $ß_{10} \geq 75$)	ISO 4406:1999: class 19/17/14 NAS 1638: class 8
Weight with single solenoid (CX3A..) Weight with double solenoid (CX3C..)	1.389 kg 1.778 kg

Solenoid	**@ 9Vdc**	**@ 12Vdc**	**@ 24Vdc**
Current supply	PWM (pulse width modulation)		
Max. current solenoid	2.35 A	1.76 A	0.88 A
Solenoid coil resistance at 25°C (77°F)	2.25 Ohm	4.0 Ohm	16.0 Ohm
PWM or superimposed dither frequency	100 ÷ 150 Hz		

Operating specifications are valid for fluid with 46 mm²/s viscosity at 40°C, using the specified Dana Brevini electronic control units.

Accessories

REMSRA.. REMDRA..	Card type control for single and double solenoid
CEPS...	Electronic amplifier plug version for signle solenoid
MAV	Electronic module for integrate control of proportional valves and ON/OFF
JMPEI0M700101	Joystick with standard handle
JMPIU0M700138	Joystick Person present handle

ORDERING CODE

CX — Proportional control bankable valve

3 — Size

***** —
A = Single solenoid
C = Double solenoid

***** — Body type:
A = Ports G3/8" parallel
B = Ports 9/16" - 18UNF parallel
G = Presetting for modular valves (parallel)
L = Ports G3/8" parallel (LS version)

****** — Type of spool
03 =

N — Symmetrical flow path control (see symbols table)

***** — Nominal flow with Dp 5 bar from P to A,B
1 = 3 l/min
2 = 10 l/min
3 = 15 l/min
4 = 20 l/min

***** — Max. current at solenoid (*1*):
E = 2.35 A - Special coil (9 VDC)
F = 1.76 A (12 VDC)
G = 0.88 A (24 VDC)

****** — Variants (*1-2*):
S1 = No variant
SV = Viton
ES = Emergency button (*3*)
P2 = Rotary emergency (*3*)
R5 = Rotary emergency 180° (*3*)
AJ = Coil with AMP Junior connection (*1*)
CZ = Coil with Deutsch connection DT04-2P (*1*)

2 — Serial No.

(*1*) Coils technical data, see page 111.
Voltage codes are not stamped on the plate, their are readable on the coils
(*2*) Connector to be ordered separately, see page 105;
(*3*) Emergency (see page 42)

HYDRAULIC SYMBOLS

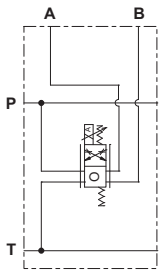

CX3 A ...

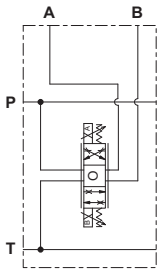

CX3 C ...

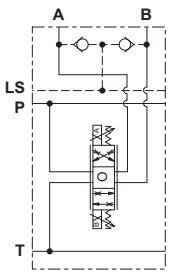

CX3 CL ...

HYDRAULIC SYMBOLS AND INSTRUCTION OF CONNECTION

PARALLEL CONNECTION

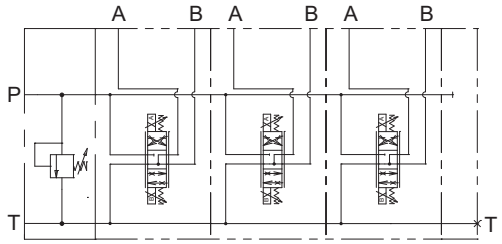

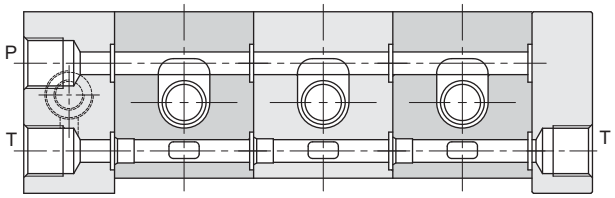

DIAGRAMS

INPUT SIGNAL
CX3.01N4...

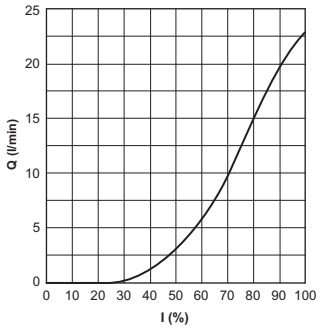

POWER LIMITS TRANSMITTED
CX3.01N4...

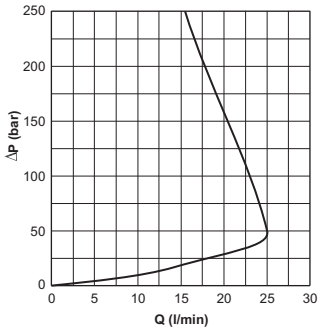

The fluid used is a mineral based oil with a viscosity of 46 mm²/s at 40°C.
The tests have been carried out at with a fluid of a 40°C.

VARIANTS

"ES"
Manual emergency

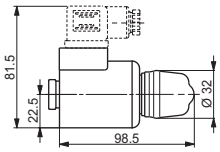

"P2"
Rotary emergency

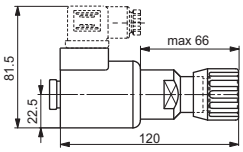

"R5"
Rotary emergency 180°

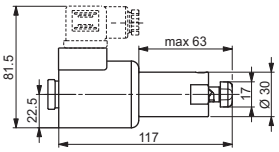

Emergency P2 and P5, tightening torque max. 6÷9 Nm (CH n. 22)

OVERALL DIMENSIONS

Parallel body

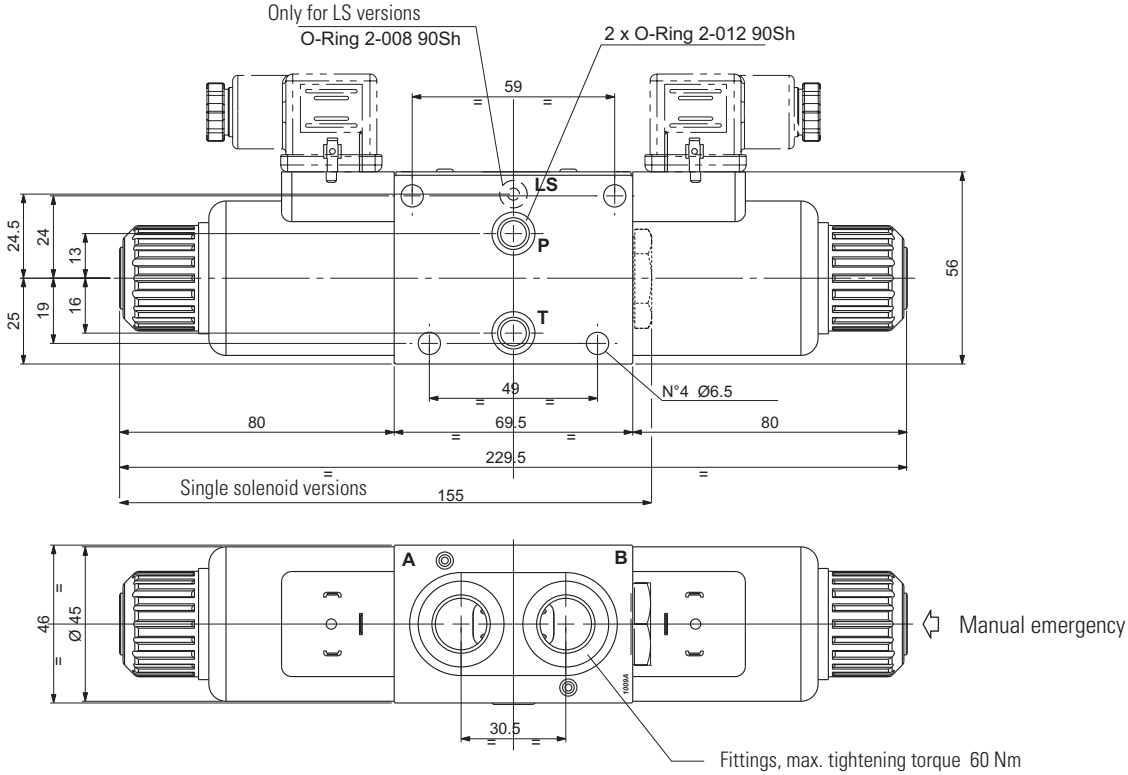

Parallel body
Presetting for modular valves

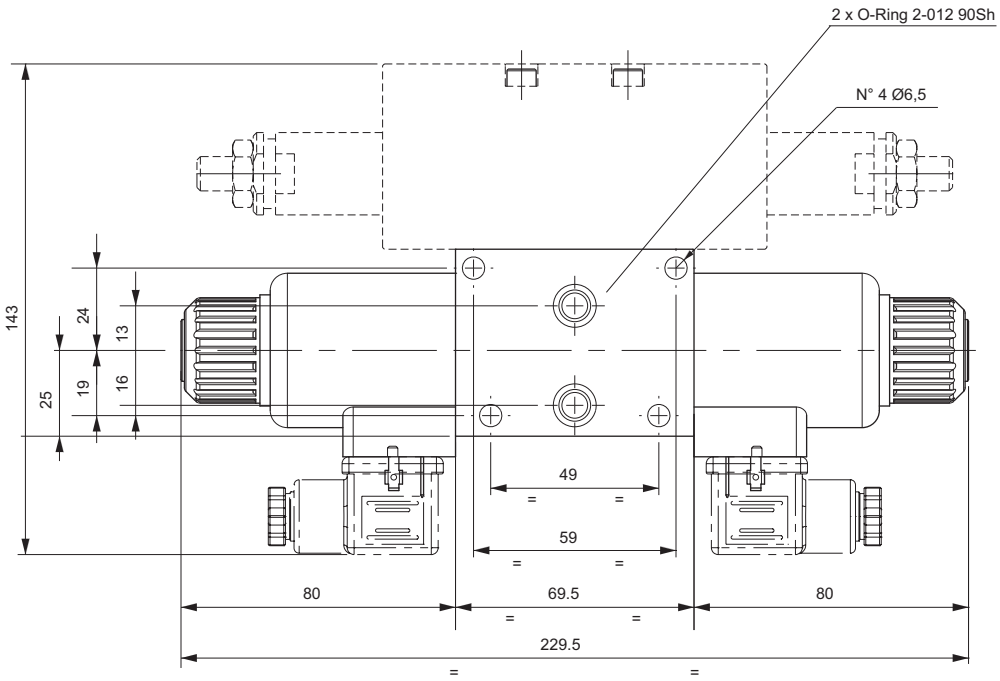

OPEN LOOP PROPORTIONAL PRESSURE COMPENSATED BANKABLE FLOW REGULATORS

Connector to be ordered separately, see page 105.

Open loop proportional flow regulator 3 way compensated with priority function.

- Regulate the flow in proportion to an applied electrical current (REM, MAV or CEPS power amplifier).
- Flow regulation is independent both from load – POUT port – and pump flow variations. Load compensation is achieved by a spool compensator, which holds the pressure drop constant across the proportional spool.
- Emergency control.
- Coils protection IP66
- Standard connectors DIN 43650 ISO 4400, AMP Junior, and Deutsch
- Regulated flow rate 15 / 20 l/min
- Cast iron zinc plated body.

ORDERING CODE

CXQ	Open loop 3 way proportional compensated flow regulator for module units and bankable valves
3	Size
C	3 way compensation
*	**P** = 3 way (external excedence Line/ priority function) **T** = 3 way (internal excedence to T)
*	Nominal flow rates **H** = 15 l/min **I** = 25 l/min
D	With decompression
*	Max. current at solenoid (*1*): **E** = 2.35 A - Special coil (9 VDC) **F** = 1.76 A (12 VDC) **G** = 0.88 A (24 VDC)
**	Variants (*1-2*): **S1** = No variant **L7** = emergency lever (*3*) **P2** = Rotary emergency (*3*) **R5** = Rotary emergency 180° (*3*) **AJ** = Coil with AMP Junior connection (*1*) **CZ** = Coil with Deutsch connection DT04-2P (*1*)
2	Serial No.

(*1*) Coils technical data, see page 111.
Voltage codes are not stamped on the plate, their are readable on the coils
(*2*) Connector to be ordered separately, see page 105;
(*3*) Emergency (see page 46)

FEATURES

Max. operating pressure ports P_{in} / P_{out} / E	250 bar
Max. operating pressure ports T (Pressure dynamic allowed for 2 millions of cycles)	250 bar
Regulated flow rate	15 / 25 l/min
Decompression drain flow	max 0.7 l/min
Relative duty cycle	Continuous 100% ED
Type of protection (Hirschmann coil)	IP 66
Flow rate gain	See diagram "Input signal flow"
Fluid viscosity	10 ÷ 500 mm²/s
Fluid temperature	-20°C ÷ 75° C
Ambient temperature	-20°C ÷ 60°C
Max. contamination level (filter $ß_{10} \geq 75$)	ISO 4406:1999: class 19/17/14 NAS 1638: class 8
Weight version CXQ3CP.. Weight version CXQ3CT..	2.25 kg 1.75 kg

Solenoid	@ 9Vdc	@ 12Vdc	@ 24Vdc
Current supply	PWM (pulse width modulation)		
Max. current solenoid	2.35 A	1.76 A	0.88 A
Solenoid coil resistance at 25°C (77°F)	2.25 Ohm	4.0 Ohm	16.0 Ohm
PWM or superimposed dither frequency	100 ÷ 150 Hz		

Operating specifications are valid for fluid with 46 mm²/s viscosity at 40°C, using the specified Dana Brevini electronic control units.

Accessories

REMSRA..	Card type control for single solenoid
CEPS...	Electronic amplifier plug version for signle solenoid
MAV	Electronic module for integrate control of proportional valves and ON/OFF
JMPEI0M700101	Joystick with standard handle
JMPIU0M700138	Joystick Person present handle

HYDRAULIC SYMBOLS

CXQ3CT..

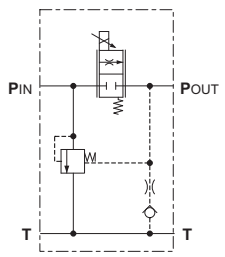

CXQ3CP..

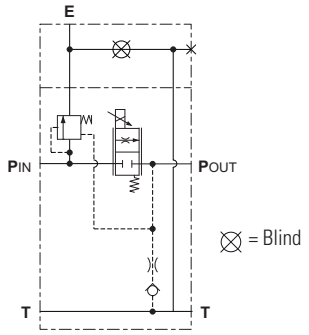

DIAGRAMS

INPUT SIGNAL FLOW

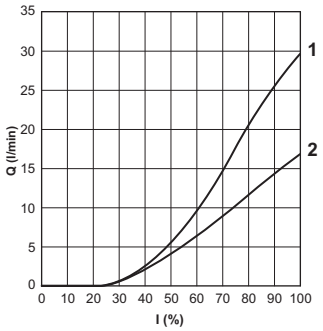

FLOW RATE BACK PRESSURE ON PRIORITY LINE

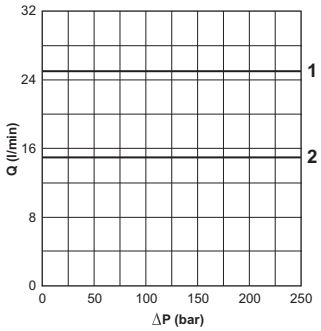

FLOW RATE BACK PRESSURE ON SECONDARY LINE

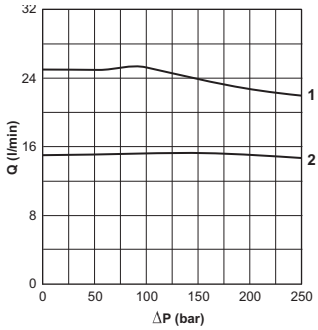

ΔP PUMP FLOW PIN → T CXQ3CT ...

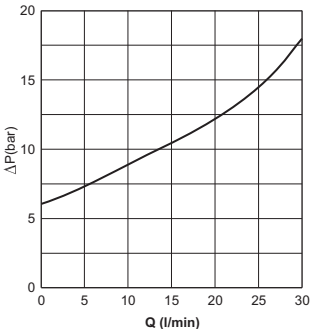

ΔP PUMP FLOW PIN → T CXQ3CP ...

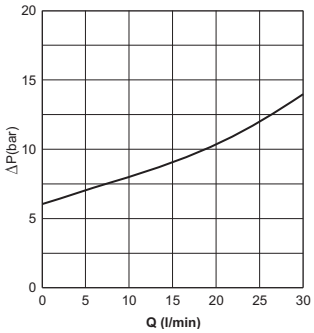

1= CXQ3C*I...
2= CXQ3C*H..

The fluid used is a mineral based oil with a viscosity of 46 mm²/s at 40°C.
The tests have been carried out at with a fluid of a 40°C.

OVERALL DIMENSIONS CXQ3CT ...

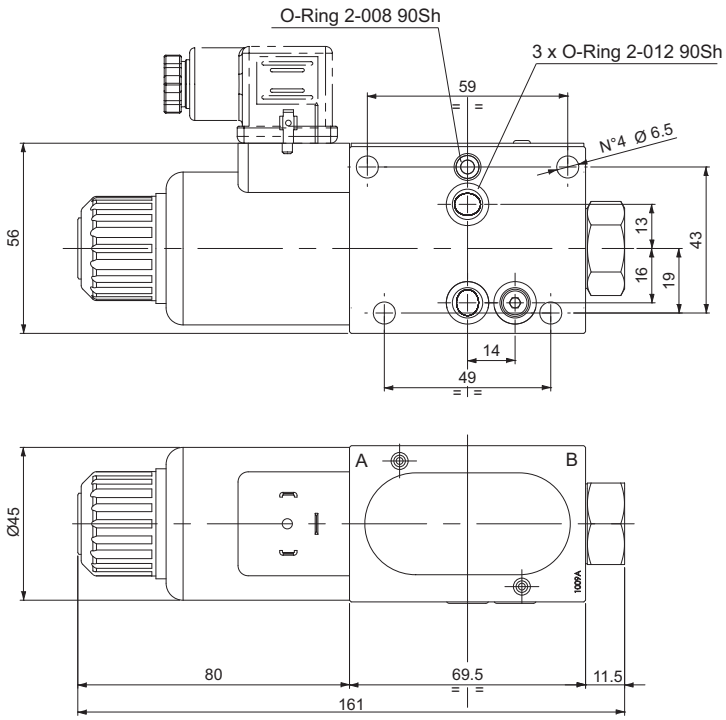

OVERALL DIMENSIONS CXQ3CP ...

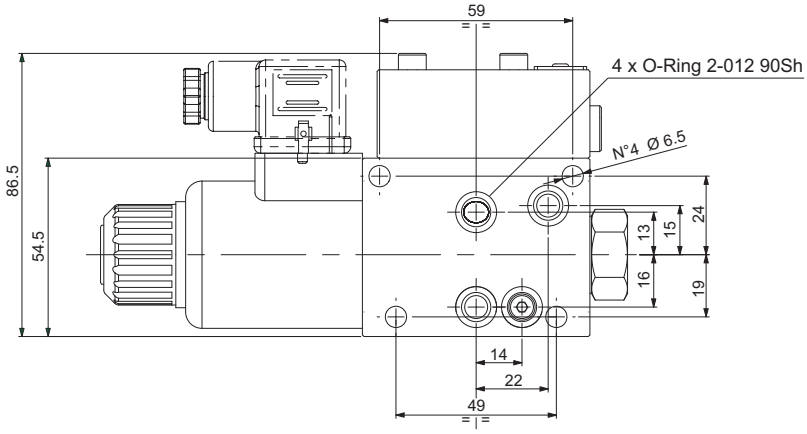

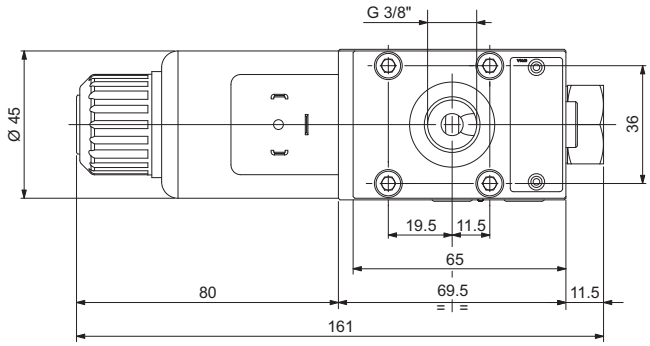

VARIANTS

"L7"
Emergency lever

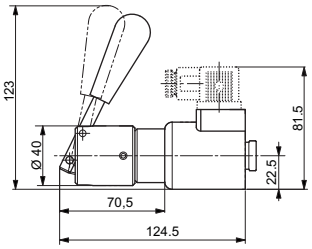

"P2"
Rotary emergency

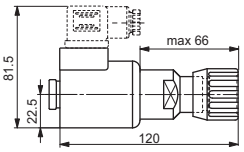

"R5"
Rotary emergency 180°

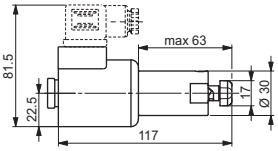

Emergency P2 and P5, tightening torque max. 6÷9 Nm (CH n. 22)

INTERMEDIATE ELEMENT

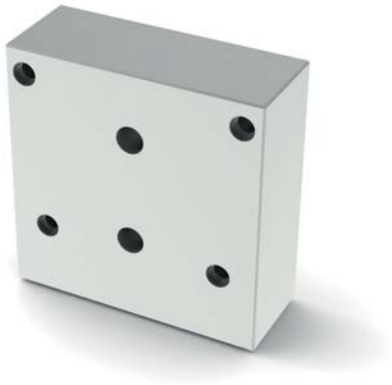

Intermediate element FI3A with pass through P and T lines.

- Suggested in assemblies with more than 8 elements in order to give better support and stability.
- Maximum flow 40 l/min.
- Aluminum body.

FEATURES

Max. operating pressure	250 bar
Max. Flow	40 l/min
Hydraulic fluid	DIN 51524 Mineral oils
Fluid viscosity	10 ÷ 500 mm²/s
Fluid temperature	-25°C ÷ 75°C
Ambient temperature	-25°C ÷ 60°C
Max. contamination level (filter $ß_{25} \geq 75$)	ISO 4406:1999: class 21/19/16 NAS 1638: class 10
Weight	0.4 kg

HYDRAULIC SYMBOL

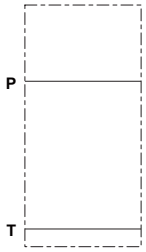

ORDERING CODE

FI	Intermediate element
3	Size
A	Standard connection
**	**00** = No variant **V1** = Viton
1	Serial No.

Mounting kit (screws and tie rods)contact our customer service.

OVERALL DIMENSIONS

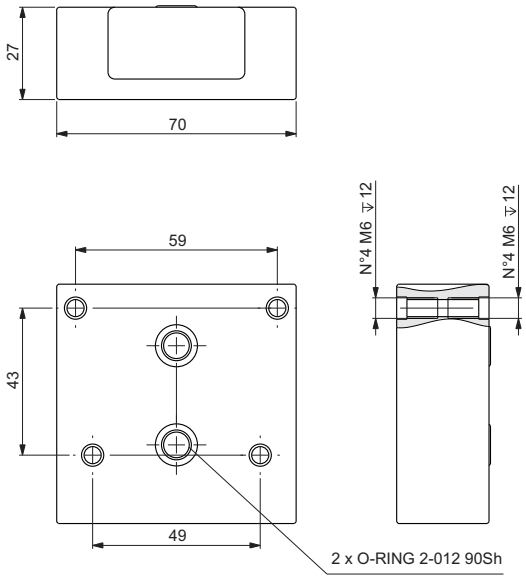

INTERMEDIATE ELEMENT WITH LS LINE

Intermediate element FI3L with pass through P-T and LS lines.

- Suggested in assemblies with more than 8 elements in order to give better support and stability.
- Maximum flow 40 l/min.
- Cast iron zinc plated body.

FEATURES

Max. operating pressure	250 bar
Max. Flow	40 l/min
Hydraulic fluid	DIN 51524 Mineral oils
Fluid viscosity	10 ÷ 500 mm²/s
Fluid temperature	-25°C ÷ 75°C
Ambient temperature	-25°C ÷ 60°C
Max. contamination level (filter $ß_{25} \geq 75$)	ISO 4406:1999: class 21/19/16 NAS 1638: class 10
Weight	0.4 kg

HYDRAULIC SYMBOL

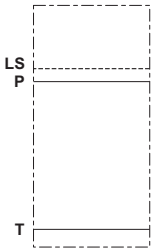

ORDERING CODE

FI	Intermediate element
3	Size
L	LS line
**	**00** = No variant **V1** = Viton
1	Serial No.

Mounting kit (screws and tie rods)contact our customer service.

OVERALL DIMENSIONS

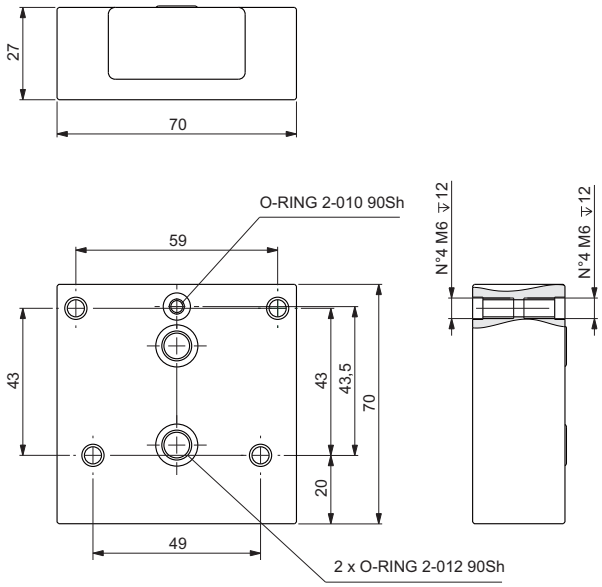

INTERMEDIATE ELEMENT WITH PRESSURE REDUCING VALVE

Intermediate element FI3RP provide a pilot-operated pressure reducing valve CVR20

- Test coupling
- Feed a secondary branch of a circuit at a lower pressure, guaranteeing minimum variation of the set pressure with flow alterations.
- Manual adjustment with a grub screw or plastic knob.
- Maximum flow 40 l/min.
- Aluminum body.

HYDRAULIC SYMBOL

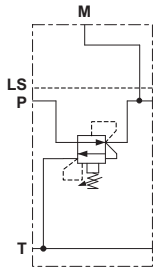

FEATURES

Max. operating pressure	250 bar
Max. Flow	40 l/min
Hydraulic fluid	DIN 51524 Mineral oils
Fluid viscosity	10 ÷ 500 mm²/s
Fluid temperature	-25°C ÷ 75°C
Ambient temperature	-25°C ÷ 60°C
Max. contamination level (filter ß25 ≥ 75)	ISO 4406:1999: class 21/19/16 NAS 1638: class 10
Weight	0.7 kg

Pressure reducing valve (CVR20...)	
Setting range (*):	
Spring 1	max 60 bar
Spring 2	max 120 bar
Spring 3	max 250 bar

(*) The minimum permissible setting pressure depending on the spring: see curves.

ORDERING CODE

FI	Intermediate element
3	Size
RP	Pressure reducing valve
*	Adjustment: **M** = Plastic knob **C** = Grub screw
*	Setting ranges **1** = max. 60 bar (white spring) **2** = max. 120 bar (yellow spring) **3** = max. 250 bar (green spring)
**	**00** = No variant **V1** = Viton
1	Serial No.

OVERALL DIMENSIONS

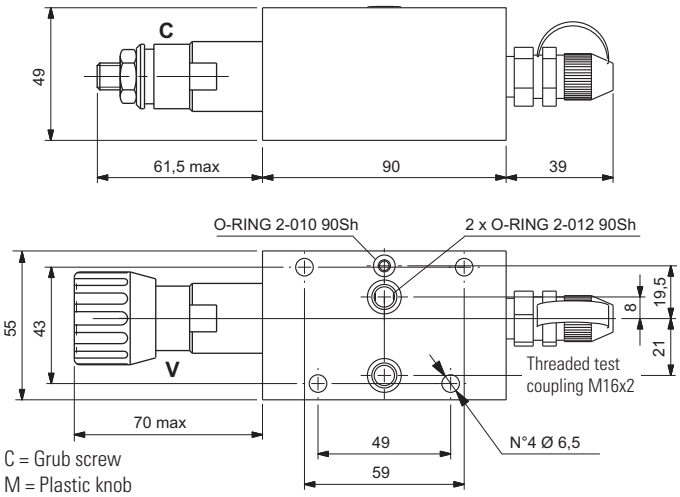

C = Grub screw
M = Plastic knob

PRESSURE-FLOW OF RELIEVING

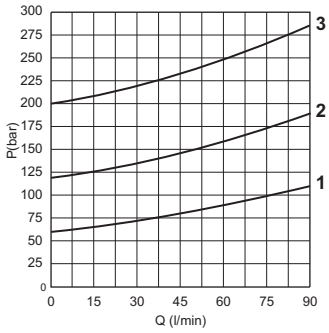

MIN.SETTING PRESSURE

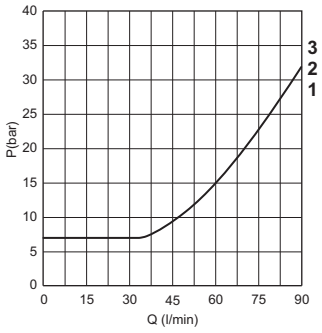

PRESSURE-FLOW RATE

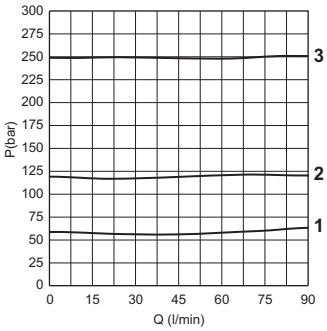

1 = max 60 bar
2 = max 120 bar
3 = max 250 bar

Fluid used: mineral based oil with viscosity 46 mm²/s at 40°C.

DIRECTIONAL CONTROL VALVE CONNECTION B-P FOR INTERMEDIATE ELEMENT FI3BP

Connector to be ordered separately, see page 105.

Directional control valve CDC3R module with body type R can be assembled with intermediate module FI3BP, to define an hydraulic scheme that can select the functions ahead or behind this module.
As shown in the example scheme, when the coil on side a is energised the flow is delivered to the sections behind this module CDC3R, instead when the coil on side b is energised the flow is delivered to the sections ahead.

- Emergency control.
- Coils protection IP65
- Power supply DC or AC (with rectifier).
- Standard connectors DIN 43650 ISO 4400, AMP Junior, flying leads and Deutsch
- Maximum flow until 30 l/min.
- Cast iron zinc plated body.

HYDRAULIC SYMBOL

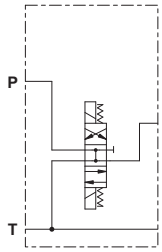

FEATURES

Max. pressure ports P/A/B/T	250 bar
Max. Flow	30 l/min
Max excitation frequency	3 Hz
Duty cycle	100% ED
Hydraulic fluid	DIN 51524 Mineral oils
Fluid viscosity	10 ÷ 500 mm²/s
Fluid temperature	-25°C ÷ 75°C
Ambient temperature	-25°C ÷ 60°C
Max. contamination level (filter $ß_{25} \geq 75$)	ISO 4406:1999: class 21/19/16 NAS 1638: class 10
Weight	1.50 kg

PRESSURE DROPS

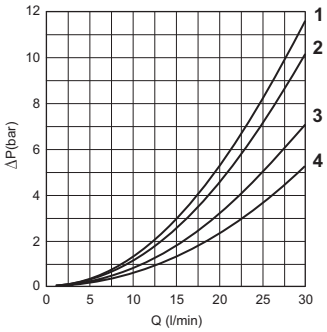

Curve	Connections
4	P → A
4	P → B
3	A → T
3	B → T
2	P → T
1	P/T passanti

Fluid used: mineral based oil with viscosity 46 mm²/s at 40°C.

ORDERING CODE

CDC	Directional control valve (with A09 coil)
3	Size
R	Body type
E	Electrical operator
02	Spool (tab.1)
C	Mounting (tab.1)
*	Voltage (tab.2)
**	Variants (tab.3)
2	Serial No.

LIMITS OF USE

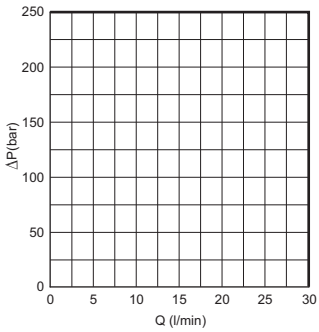

The tests have been carried out with solenoids at operating temperature and a voltage 10% less than rated voltage with a fluid temperature of 50 C°. The fluid used was a mineral oil with a viscosity of 46 mm²/s at 40 degrees C. The values in the diagram refer to tests carried out with the oil flow in two directions simultaneously (e.g. from P to A and at the same time B to T).

In the cases where valves 4/2 and 4/3 are used with the flow in one direction only, the limits of use could have variations which may even be negative. The tests were carried out with a counter-pressure of 2 bar at T port.

ORDERING CODE

Tab.1 - Standard spools

Two solenoids,spring centred "C" Mounting			
Code	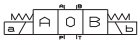	Covering	Transient position
02		-	

Tab.2 - Coils A09 voltage (5)

Code	Voltage	Max. winding temperature (Ambient temperature 25°C)	Rated power W	Resistance @ 20°C (Ohm) ±7%
L	12 Vdc	123 °C	27	5.3
M	24 Vdc	123 °C	27	21.3
N (1)	48 Vdc	123 °C	27	85.3
Z (2)	102 Vdc	123 °C	27	392
P (1)	110 Vdc	123 °C	27	448
X (4)	205 Vdc	123 °C	27	1577
W (4)	Without coils			

Tab.3 - Variants (5-6)

Code	Variant
S1	No variant
SV	Viton
LF	Emergency control lever (see page 34)
LR	Emergency control lever 180° rotated (see page 34)
ES	Emergency button (see page 34)
P2 (7)	Rotary emergency button (see page 34)
R5 (7)	Rotary emergency b. 180° (see page 34)
3T	First elem. for series connec.
AJ (8)	AMP Junior connection (see page 107)
FL (8)	Coil with flying leads 250 mm (see page 107)
LD (8)	Coil with flying leads 130 mm and integrated diode (see page 107)
CX (8)	Deutsch connecection with bidirectional diode (see page 107)

1

EXAMPLE WITH VALVE CDC3R AND INTERMEDIATE ELEMENT FI3BP

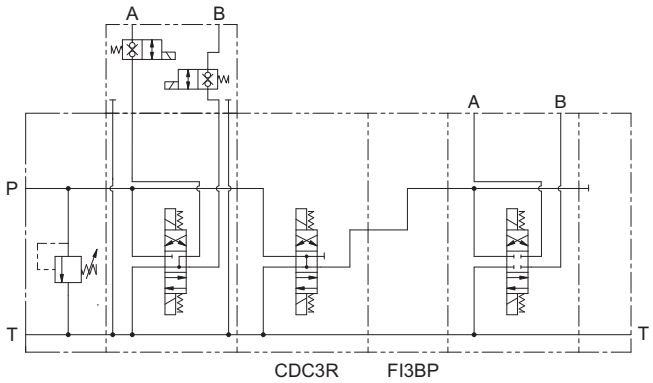

(1) Special voltage
(2) With rectifier: 115 VAC/50Hz - 120 VAC/60Hz
(3) With rectifier: 230 VAC/50Hz - 240 VAC/60Hz
(4) Performance are guaranteed only using valves completed with coil
(5) Connector to be ordered separately, see page 105;
Coils technical data, see page 107;
Voltage codes are not stamped on the plate, their are readable on the coils
(6) Other variants available on request
(7) Tightening torque max. 6÷9 Nm (CH n. 22)
(8) Available in 12V or 24V DC voltage only

OVERALL DIMENSIONS

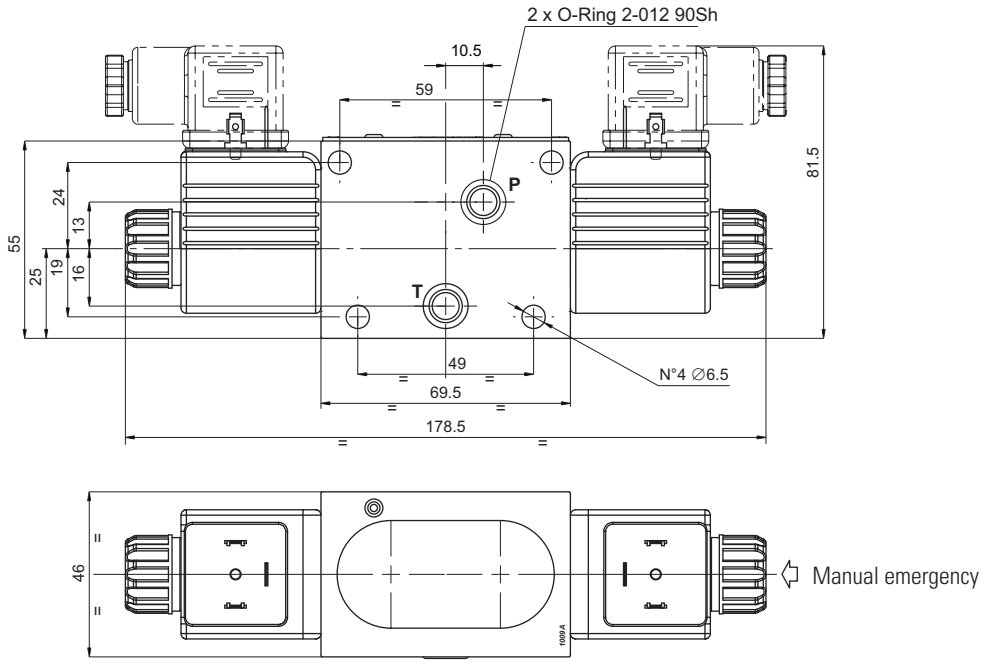

INTERMEDIATE ELEMENT FOR VALVE CDC3R

Intermediate element FI3BP for valve CDC3R to connect B to P lines
- Maximum flow 40 l/min.
- Aluminum body.

FEATURES

Max. operating pressure	250 bar
Max. Flow	40 l/min
Hydraulic fluid	DIN 51524 Mineral oils
Fluid viscosity	10 ÷ 500 mm²/s
Fluid temperature	-25°C ÷ 75°C
Ambient temperature	-25°C ÷ 60°C
Max. contamination level (filter $ß_{25} \geq 75$)	ISO 4406:1999: class 21/19/16 NAS 1638: class 10
Weight	0.4 kg

HYDRAULIC SYMBOL

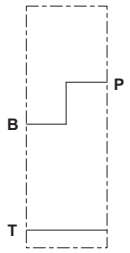

ORDERING CODE

FI	Intermediate element
3	Size
BP	For valve CDC3R
**	**00** = No variant **V1** = Viton
1	Serial No.

OVERALL DIMENSIONS

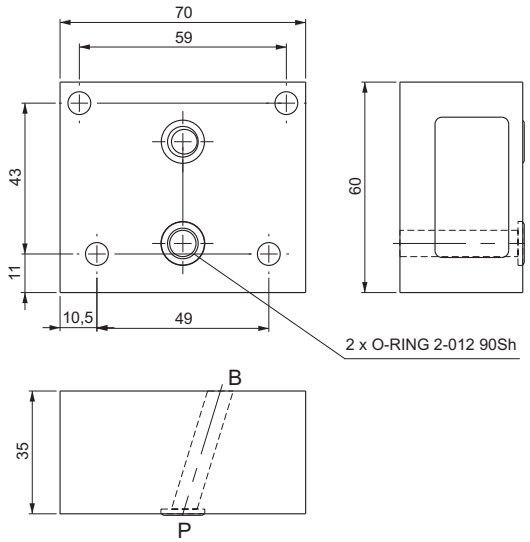

OUTLET MODULE UNITS

Outlet module units FU3.

- Threaded ports (T) sizes G3/8" or 9/16"-18UNF.
- Outlet modules without ports only for parallel connections
- Maximum flow 40 l/min.
- Aluminum body.

FEATURES

Max. operating pressure	250 bar
Max. Flow	40 l/min
Hydraulic fluid	DIN 51524 Mineral oils
Fluid viscosity	10 ÷ 500 mm^2/s
Fluid temperature	-25°C ÷ 75°C
Ambient temperature	-25°C ÷ 60°C
Max. contamination level (filter $ß_{25} \geq 75$)	ISO 4406:1999: class 21/19/16 NAS 1638: class 10
Weight	0.2 kg

HYDRAULIC SYMBOLS

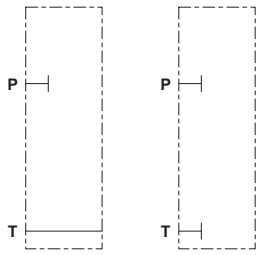

FU3*002 FU3002

ORDERING CODE

FU	Otulet module unit
3	Size
*	Port size: For outlet module without ports is not required (only for parallel style) **1** = G3/8" **2** = 9/16"-18UNF
00	No variant
2	Serial No.

OVERALL DIMENSIONS

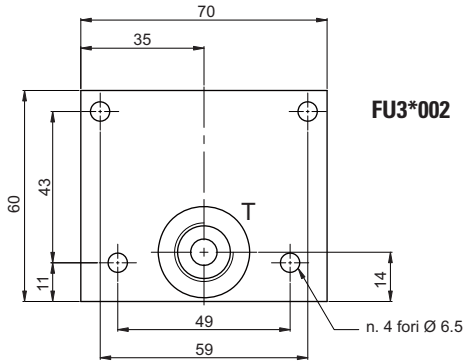

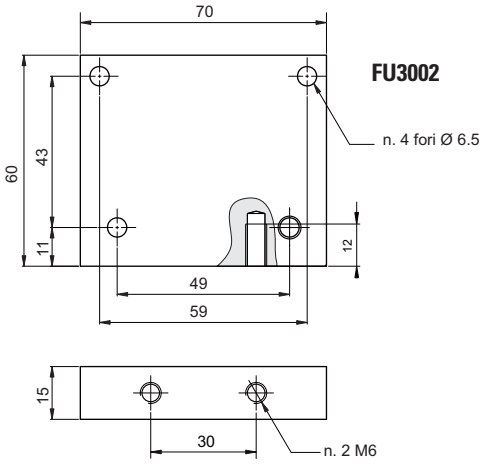

OUTLET MODULE UNITS WITH SIDE PORTS

Outlet module units FUT with side ports.

- Threaded ports (T) sizes G1/4"
- Maximum flow 40 l/min.
- Aluminum body.

FEATURES

Max. operating pressure	250 bar
Max. Flow	40 l/min
Hydraulic fluid	DIN 51524 Mineral oils
Fluid viscosity	10 ÷ 500 mm^2/s
Fluid temperature	-25°C ÷ 75°C
Ambient temperature	-25°C ÷ 60°C
Max. contamination level (filter $ß_{25} \geq 75$)	ISO 4406:1999: class 21/19/16 NAS 1638: class 10
Weight	0.4 kg

HYDRAULIC SYMBOLS

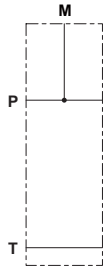

ORDERING CODE

FUT	Otulet module unit
3	Size
3	Port size: **3** = G1/4"
00	No variant
1	Serial No.

OVERALL DIMENSIONS

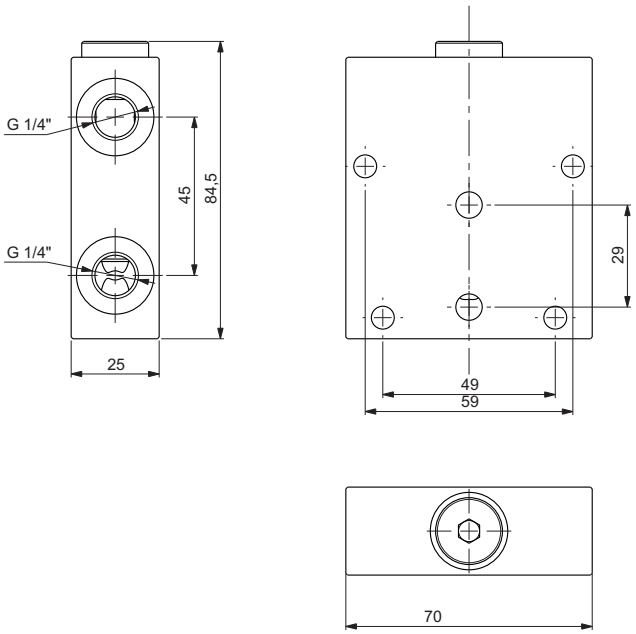

OUTLET MODULE UNITS WITH OVERCENTER AND TOP PORT

Outlet module FUS3 includes an overcenter valve to control the movement of a cylinder end connected to port A1.

- Threaded ports (A1) sizes G3/8"
- Maximum flow 40 l/min.
- Aluminum body.

FEATURES

Max. operating pressure	250 bar
Max. Flow	40 l/min
Hydraulic fluid	DIN 51524 Mineral oils
Fluid viscosity	10 ÷ 500 mm^2/s
Fluid temperature	-25°C ÷ 75°C
Ambient temperature	-25°C ÷ 60°C
Max. contamination level (filter $ß_{25} \geq 75$)	ISO 4406:1999: class 21/19/16 NAS 1638: class 10
Weight	0.7 kg

Outlet module for directional control valve CDC3 and CD3 body "S" (see pages 25 and 35).

HYDRAULIC SYMBOLS

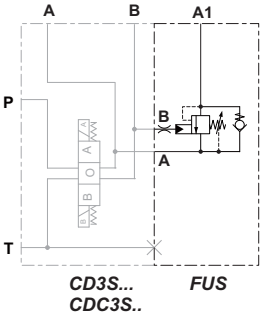

OVERALL DIMENSIONS

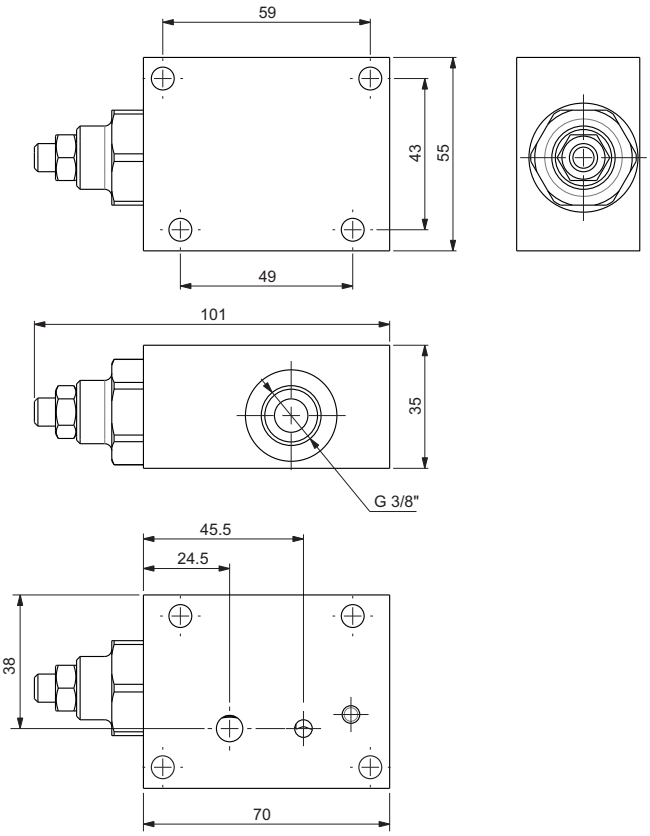

ORDERING CODE

FUS	Outlet module units with overcenter and top port
3	Size
1	Port size: **1** = G3/8"
00	No variant
1	Serial No.

PRESSURE DROPS

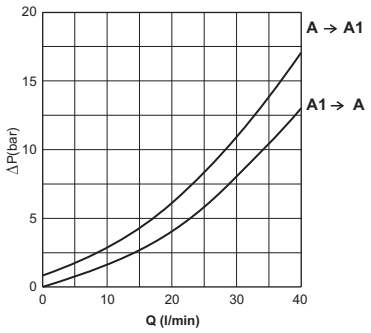

A pressure compensated valve maintains a constant flow rate across the main spool regardless of the load induced pressure, therefore the movement speed of actuator is not affected by load. Local compensator on every section allows simultaneous movement of multiple functions.
Compensated valves can be of two types: pre-compensated or post-compensated.

Patented

PRE-COMPENSATED VALVE CXDH3-CDH3

- Compact and simple solution
- Proportional control with valves CXDH3 or ON/OFF control with valves CDH3
- Available pressure rielief LSa-LSb valves on every working section
- Valve body with the same interface of other bankable valves (for example ON/OFF valves type CD3-CDC3 and CD5)
- If the total amount of flow required by single function exceed the available pump flow (flow saturation) then the function with lower load will have priority, and function with higher load will stop

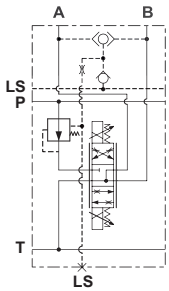

CXDH.3 proportional

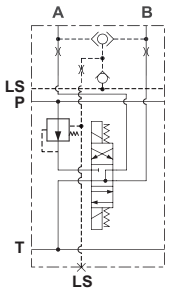

CDH.3 on/off

POST-COMPENSATED VALVE (FLOW SHARING) CFS3

- If flow saturation occurs then the function will proportionally reduce the flow (Flow Sharing) and will continue the movement
- This solution permits high efficiency and energy saving
- Valve body with the same interface of other bankable valves (for example ON/OFF valves type CD3-CDC3 and CD5)

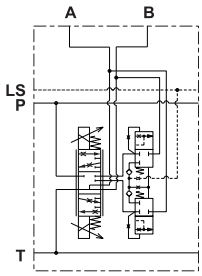

CFS3C.03 ..

CXDH3 proportional valves with FEH30PQ inlet module for Fixed Displacement pump

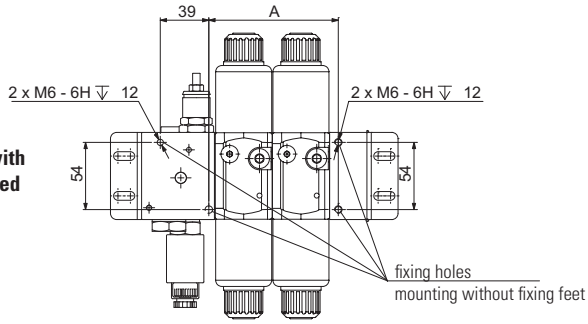

No elements	A mm	B mm	C mm	D mm
2	104	171	209	221
3	150	217	255	267
4	196	263	301	313
5	242	309	347	359
6	288	355	393	405
7	334	401	439	451
8	380	447	485	497

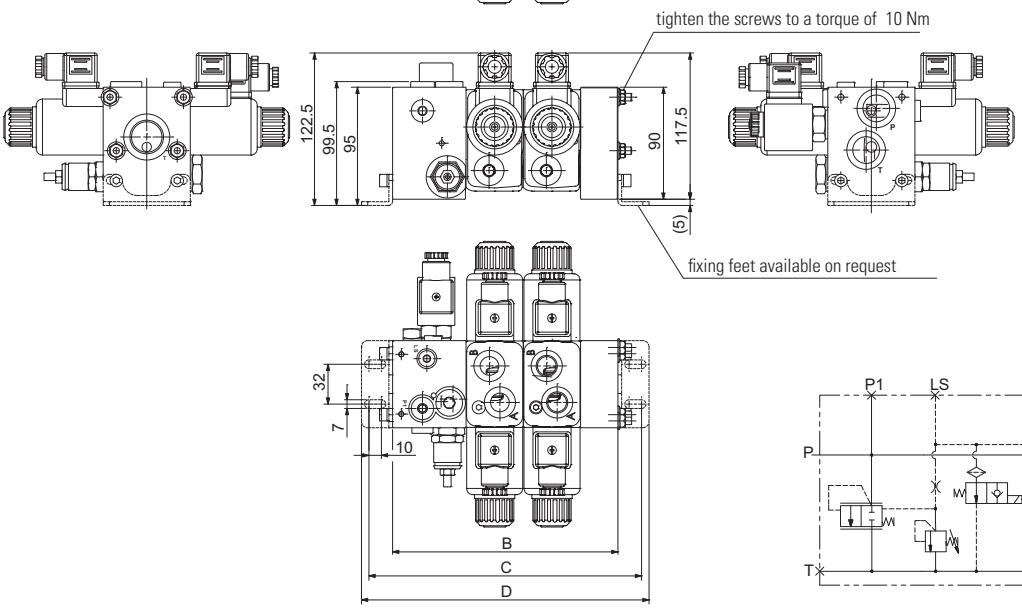

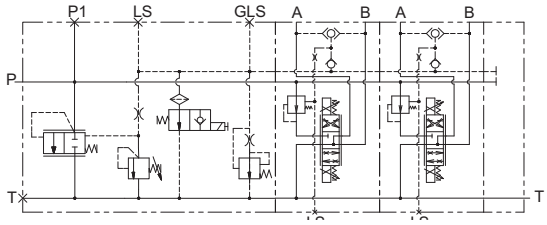

CXDH3 Flow Sharing valves with FEH30PQ inlet module

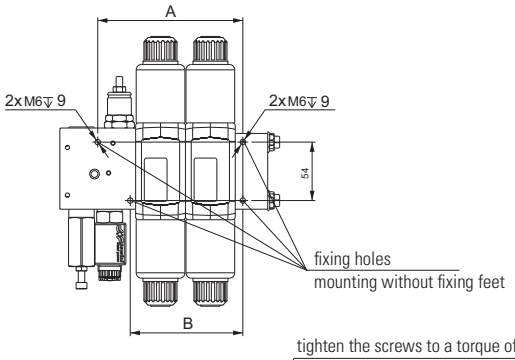

No elements	A mm	B mm	C mm
2	134	104	192
3	180	150	238
4	226	196	284
5	272	242	330
6	318	288	376
7	364	334	422
8	410	380	468

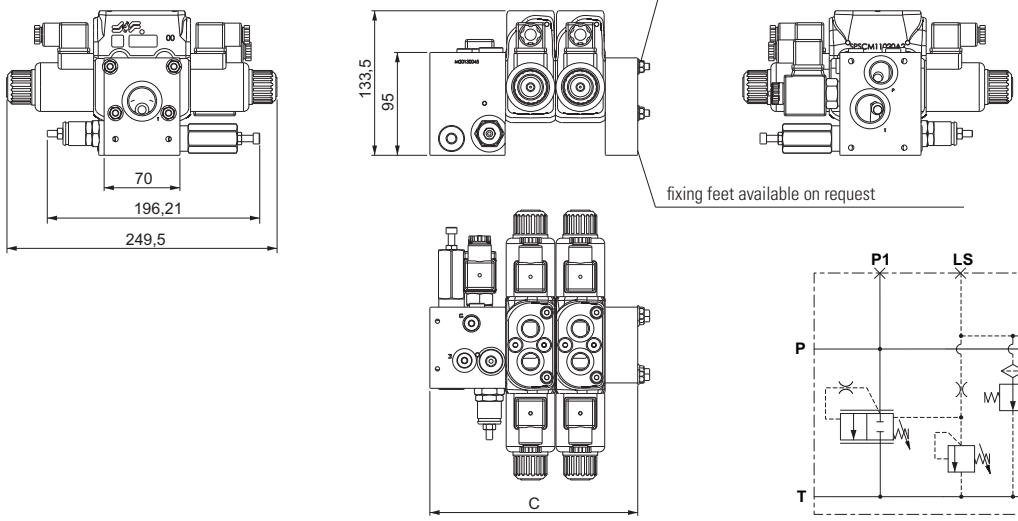

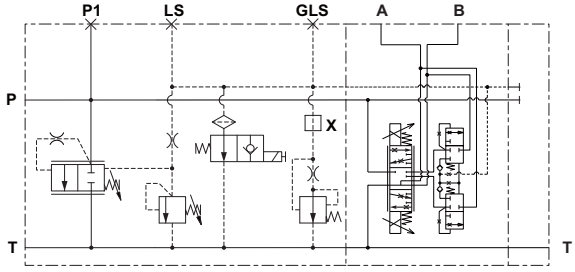

Composition form

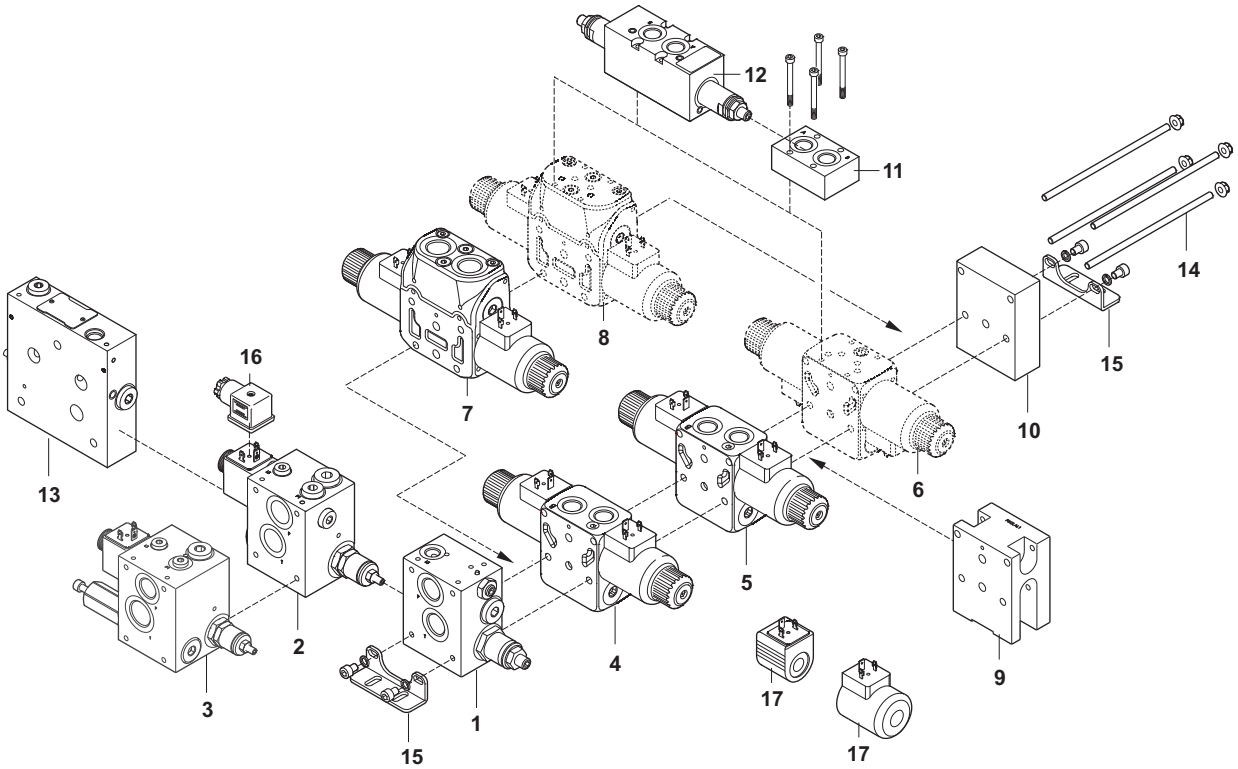

SIZE 6 valves CXDH3, CDH3, CFS3 can be assembled with:
- **valves CDC3, CD3, CX3 (page 6);**
- **with SIZE 10 valves CD5 (page 82);**
- **with proportional directional valves HPV41 (see catalogue cod. DOC00079) using the interface HSIF (page 100).**

To obtain the best performances, we suggest to assemble the working sections with higher flow rate near the inlet module, leaving the ones with lower flow at the end of the assembled valve.

Ref.	Type	Descriprion	Page
1	FEH30PQ	OPEN CENTER inlet module for fixed displacement pumps	59
2	FEH30LS	CLOSED CENTER inlet module for variable displacement load sensing pumps	61
3	FEH35PQ	OPEN CENTER inlet module with compensator for fixed displacement pumps	63
4	CXDH3	PROPORTIONAL pre compensated valves CXDH3 / CDH3 (variants)	65 73
5	CDH3	ON/OFF pre compensated valves CXDH3 / CDH3 (variants)	69 73
6	CXDH3	Body G-M for modular valves	65
7	CFS3	Post compensated FLOW SHARING valve High efficiency energy saving CFS3 (variants)	74 77
8	CFS3	Body G for modular valves	74
9	FIH3L	Intermediate element for pre and post compensated valves	78
10	FUH	Outlet module units	79
11	CM3F	Modular elements with ports A-B	94
12	CM3M	Modular max. pressure bankable valves	97
13	HSIF	Interface for proportional directional valves HPV41	100
14	—	Mounting kit	101
15	—	Fixing feet	103
16	—	Connectors	105
17	—	Coils	106

How to order

To order the assembly, specify the codes in progressive order (inlet, valves, outlet, mounting kit, feet). See example page 114.
For any further special version not shown in this catalogue, please contact our Technical Department.

OPEN CENTER INLET MODULE FOR FIXED DISPLACEMENT PUMPS

Connector to be ordered separately, see page 105.

Open center inlet module units FEH30PQ for fixed displacement pumps with pressure relief valve CMP-MC/MS and electrical venting valve CRP04.

- Includes a pressure compensated load sensing signal bleed to minimize system losses even at high operating pressures. Signal bleed can be closed in case it not required.
- Manual adjustment with a grub screw.
- Threaded ports P-T sizes G1/2"
- Maximum flow 80 l/min.
- Cast iron zinc plated body.

ORDERING CODE

FEH30	Inlet module units with pressure relief valve
P	Electrical venting valve
Q	Pressure compensator element
3	Size
3	Ports G1/2"
C	Adjustment: **C** = Grub screw
*	Setting ranges: **1** = 35 ÷ 90 bar **2** = 75 ÷ 190 bar **3** = >150 bar
*	Voltage venting valve (*1*): **L** = 12 Vdc **M** = 24 Vdc **N** = 48 Vdc **0** = Without electrical venting valve (plugged)
**	Variants (*1-2*): **S1** = No variants **SV** = Viton **PY** = Push button emergency (*3*) **PS** = Rotary emergency (*3*) **AJ** = AMP Junior connection 22W (see page 106) **CX** = Deutsch connect. bidirectional diode (see page 106)
2	Serial No.

(*1*) Coils technical data, see page 106)
Voltage codes are not stamped on the plate, their are readable on the coils
(*2*) Connector to be ordered separately, see page 105;
Other variants available on request.
(*3*) Emergency (see page 60

HYDRAULIC SYMBOL

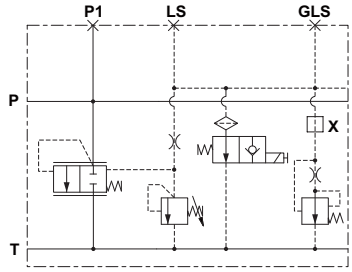

"X" predisposition for LS bleed plug

FEATURES

Max. operating pressure	300 bar
Setting ranges for pressure relief valve	Spring 1: 35 ÷ 90 bar Spring 2: 75 ÷ 190 bar Spring 3: >150 bar
Max. flow	80 l/min (see charateristic curves)
Fluid viscosity	10 ÷ 500 mm²/s
Max LS bleed flow	0.5 l/min*
Fluid temperature	-25°C ÷ 75° C
Ambient temperature	-25°C ÷ 60°C
Max. contamination level (filter $ß_{25} \geq 75$)	ISO 4406:1999: class 21/19/16 NAS 1638: class 10
Weight	2.9 kg
Max. excitation frequency	2 Hz
Duty cycle	100% ED
Type of protection (in relation to the connection used)	IP65

To obtain a correct compensation the inlet flow must be 8% greater the sum of the regulated flows

* Bleed flow rate is subtracted to the energized valve working at the higher pressure. To avoid this behavior plug the bleed (see "X" on hydraulic scheme)

CHARACTERISTIC CURVE

Inlet module Pressure Drops

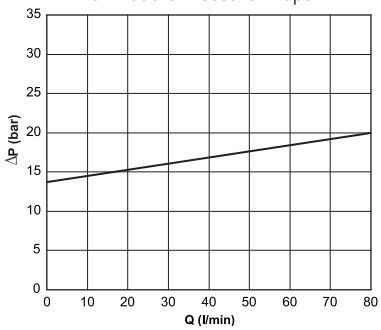

OVERALL DIMENSIONS

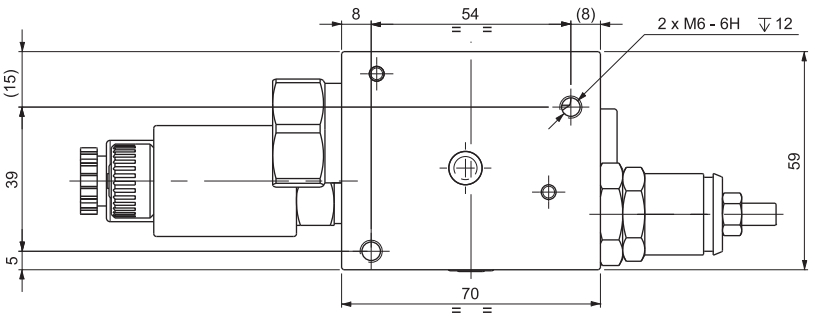

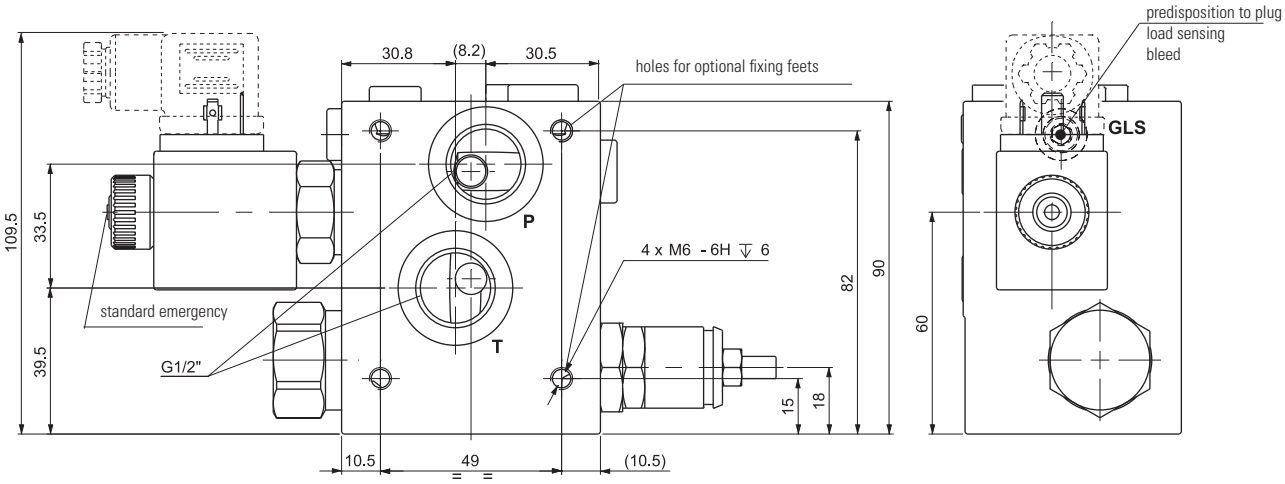

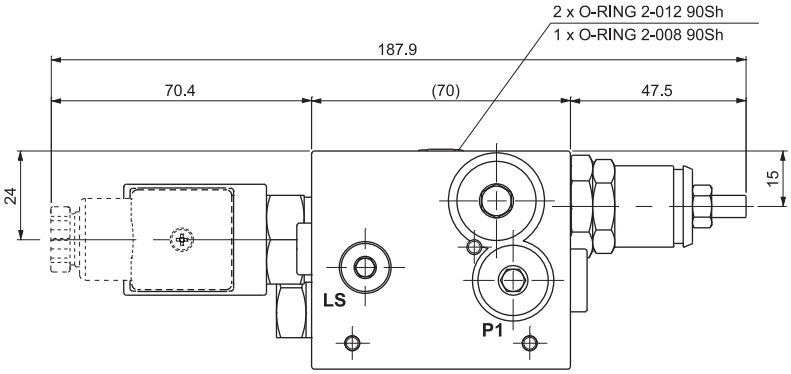

VARIANTS

"PS"
Emergency rotary

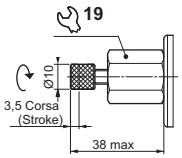

"PY"
Emergency with push button

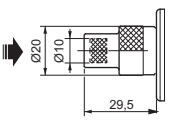

"AJ"
AMP Junior

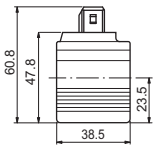

"CX"
Deutsch with diode

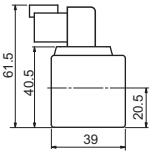

CLOSED CENTER INLET MODULE FOR VARIABLE DISPLACEMENT LOAD SENSING PUMPS

Closed center inlet module units FEH30LS for variable displacement Load Sensing pumps with pressure relief valve CMP30 and a pressure compensated load sensing signal bleed to minimize system losses even at high operating pressures. Signal bleed can be closed in case it is not required.

- Manual adjustment with a grub screw.
- Threaded ports P-T sizes G1/2" or 7/8" 14UNF;
  LS ports, G1/4" or 7/16" 20UNF
- Maximum flow 80 l/min.
- Cast iron zinc plated body.

ORDERING CODE

FEH30	Inlet module units with pressure relief valve
LS	With LS signal
3	Size
*	Ports: **3** = G1/2" (P,T ports) G1/4" (LS port) **4** = 7/8" - 14UNF (P,T ports) 7/16" - 20UNF (LS port)
*	Adjustment: **M** = Plastic knob **C** = Grub screw
*	Setting ranges: **1** = max 50 bar **2** = max 140 bar **3** = max 350 bar
**	Variants: **00** = No variants **V1** = Viton
1	Serial No.

HYDRAULIC SYMBOL

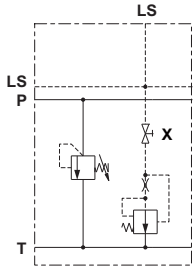

"X" Tap for LS bleed plug

FEATURES

Max. operating pressure	300 bar
Setting ranges for pressure relief valve	Spring 1: max 50 bar Spring 2: max 140 bar Spring 3: max 350 bar
Max. Flow	80 l/min (see charateristic curves)
Max LS bleed flow rate	0.5 l/min*
Fluid viscosity	10 ÷ 500 mm²/s
Fluid temperature	-25° ÷ 75° C
Ambient temperature	-25°C ÷ 60°C
Max. contamination level (filter $ß_{25} \geq 75$)	ISO 4406:1999: class 21/19/16 NAS 1638: class 10
Weight	1.9 kg

* Bleed flow rate is subtracted to the energized valve working at the higher pressure. To avoid this behavior close LS tap (see "X" on hydraulic scheme)

PRESSURE RELIEF VALVE CURVES

Pressure Flow

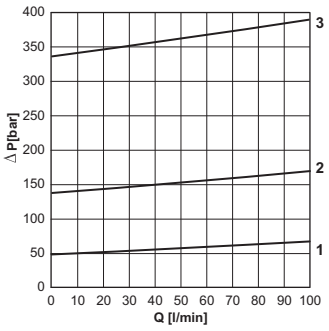

Minimun setting pressure

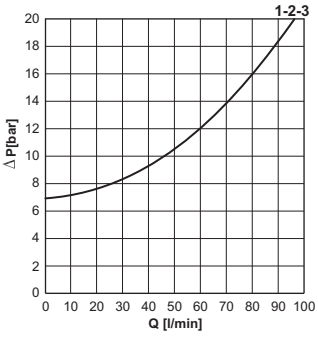

OVERALL DIMENSIONS

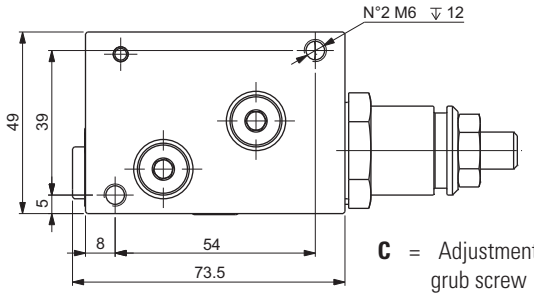

C = Adjustment with grub screw

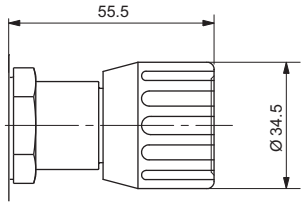

M = Adjustment with plastic knob

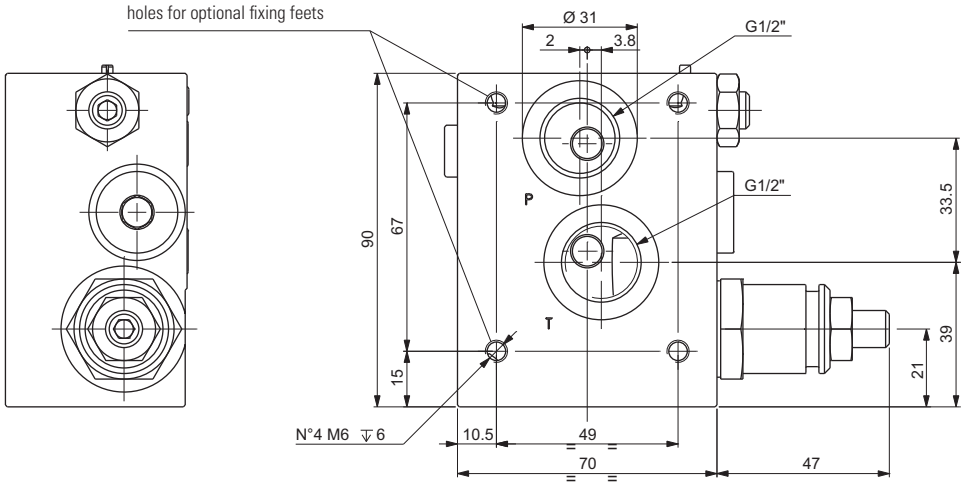

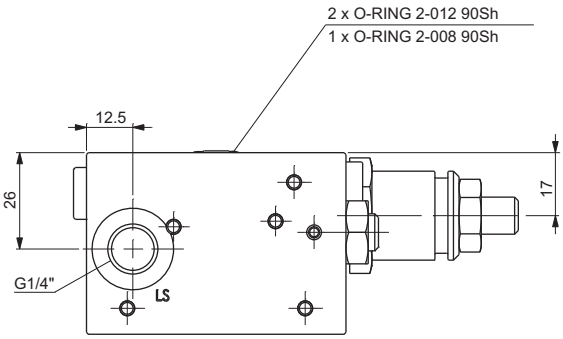

OPEN CENTER INLET MODULE WITH COMPENSATOR FOR FIXED DISPLACEMENT PUMPS

Connector to be ordered separately, see page 105.

Open center inlet module units FEH35PQ with adjustable compensator regulator for fixed displacement pumps with pressure relief valve CMP-MC/MS and electrical venting valve CRP04.

- Includes a pressure compensated load sensing signal bleed to minimize system losses even at high operating pressures. Signal bleed can be closed in case it not required.
- Manual adjustment with a grub screw.
- Threaded ports P G1/2"; T G3/4"
- Maximum flow 120 l/min.
- Cast iron zinc plated body.

ORDERING CODE

FEH35	Inlet module units with pressure relief valve and pressure compensator
P	Electrical venting valve
Q	Pressure compensator element
3	Size
3	**3** = Port P = G1/2" - Port T = G3/4"
C	Adjustment: **C** = Grub screw
*	Setting ranges: **1** = 35 ÷ 90 bar **2** = 75 ÷ 190 bar **3** = >150 bar
*	Voltage venting valve (*1*): **L** = 12 Vdc **M** = 24 Vdc **N** = 48 Vdc **0** = Without electrical venting valve (plugged)
**	Variants (*1-2*): **S1** = No variants **SV** = Viton **PY** = Push button emergency (*3*) **PS** = Rotary emergency (*3*) **AJ** = AMP Junior connection 22W (see page 106) **CX** = Deutsch connect. bidirectional diode (see page 106)
1	Serial No.

(*1*) Coils technical data, see page 106)
Voltage codes are not stamped on the plate, their are readable on the coils
(*2*) Connector to be ordered separately, see page 105;
Other variants available on request.
(*3*) Emergency (see page 64

HYDRAULIC SYMBOL

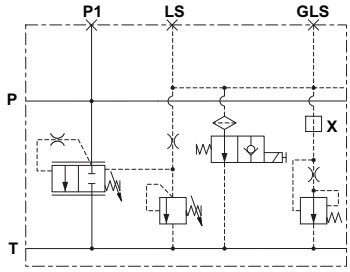

"X" predisposition for LS bleed plug

FEATURES

Max. operating pressure	310 bar
Setting ranges for pressure relief valve	Spring 1: 35 ÷ 90 bar Spring 2: 75 ÷ 190 bar Spring 3: >150 bar
Setting compensator regulator	10 ÷ 19 bar
Max. flow	120 l/min (see charateristic curves)
Fluid viscosity	10 ÷ 500 mm²/s
Max LS bleed flow	0.5 l/min*
Fluid temperature	-25°C ÷ 75° C
Ambient temperature	-25°C ÷ 60°C
Max. contamination level (filter $ß_{25} \geq 75$)	ISO 4406:1999: class 21/19/16 NAS 1638: class 10
Weight	3.1 kg
Max. excitation frequency	2 Hz
Duty cycle	100% ED
Type of protection (in relation to the connection used)	IP65

To obtain a correct compensation the inlet flow must be 8% greater the sum of the regulated flows

* Bleed flow rate is subtracted to the energized valve working at the higher pressure. To avoid this behavior plug the bleed (see "X" on hydraulic scheme)

CHARACTERISTIC CURVE

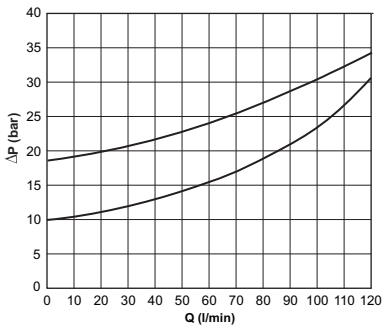

Pressure drops with compensator setting at 10 and 19 bar

OVERALL DIMENSIONS

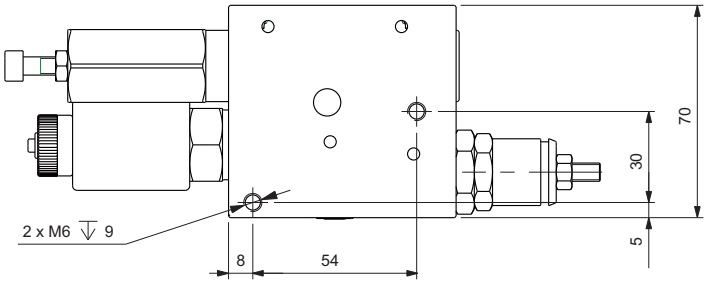

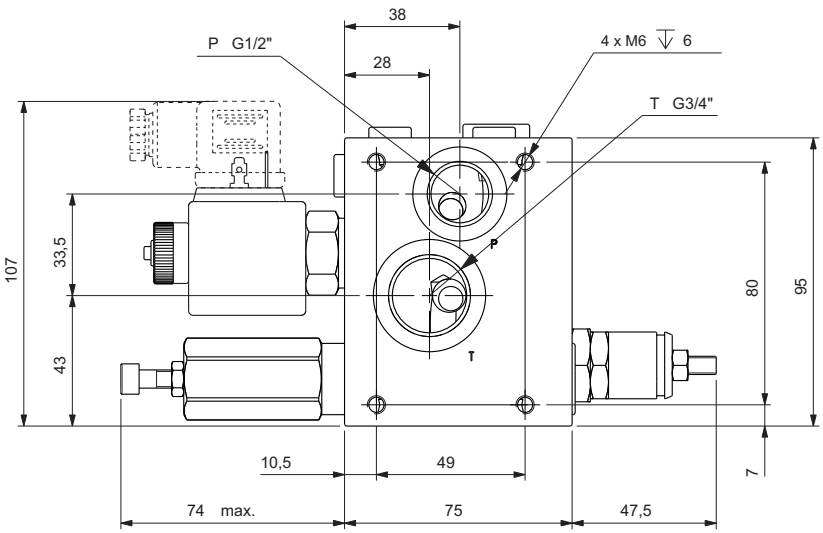

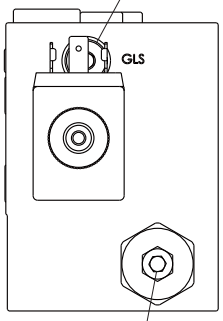

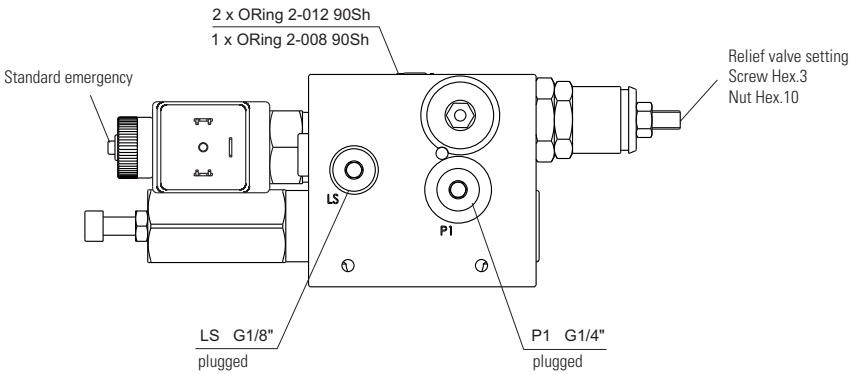

VARIANTS

"PS"
Emergency rotary

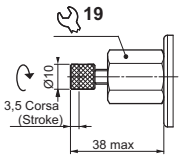

"PY"
Emergency with push button

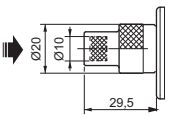

"AJ"
AMP Junior

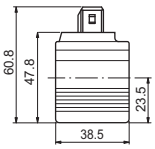

"CX"
Deutsch with diode

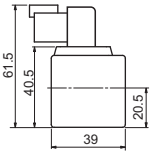

PROPORTIONAL PRE COMPENSATED VALVES

Patented

Connector to be ordered separately, see page 105.

Stackable proportional directional valves CXDH with LS signal locally compensated

- Used for controlling fluid direction and flow rate as a function of the supply current to the proportional control solenoid.
- Flow regulation load indipendent.
- Load compensantionis achieved by a 2 way pressure compensator wich holds, the pressure drop constants across the proportional spool.
- Emergency control.
- Threaded ports or interface for modular valves
- Regulated flow rate until 35 l/min.
- Standard connectors DIN 43650 ISO 4400, AMP Junior and Deutsch
- Cast iron zinc plated body.

ORDERING CODE

CXDH	Proportional compensated bankable valve
3	Size
*	Mounting (see table 1)
*	Body type: **A** = Ports G3/8" parallel **G**= Interface for modular valves **B**= Ports SAE 9/16" - 18UNF **L**= Ports G3/8" parallel with valves LSA LSB **M**= Interface for modular valves with valves LSA LSB
**	Type of spool (*1*) **03** =
N	Symmetrical flow path control
*	Flow rating

*	Δp 8bar	Δp 4bar
D	8 l/min	6 l/min
2	16 l/min	12 l/min
3	22 l/min	18 l/min
4	35 l/min	28 l/min

*	Differential pressure Δp **8** = Δp 8 bar **4** = Δp 4 bar
*	Max. current at solenoid (*2*): **E** = 2.35 A (9 Vdc) - Special coil **F** = 1.76 A (12 Vdc) **G** = 0.88 A (24 Vdc)
**	Variants (*3*): **S1** = No variant **LF/LV** = Emergency control lever (see page 72) For body type G and M order LR variant (emergency lever 180° rotated) **SV** = Viton **ES** = Emergency button (*4*) **P2**= Rotary emergency (*4*) **R5** = Rotary emergency 180° (*4*) **AJ** = AMP Junior coil (see page 111) **CZ** = Deutsch DT04-2P coil (see page 111)
1	Serial No.

Calibrated diaphragms on P line, see page 104.

(*1*) Available spool 01 A and B ports are not sealed: fluid can escape from LS line (see hydraulic scheme).
(*2*) Coils technical data, see page 111
Voltage codes are not stamped on the plate, their are readable on the coils
(*3*) Connector to be ordered separately, see page 105; Other variants available on request.
(*4*) Emergency see page72

FEATURES

Max. operating pressure	300 bar
Max. operating pressure ports T (Pressure dynamic allowed for 2 millions of cycles)	250 bar
Regulated flow rate (A / B ports)	up to 35 l/min
Relative duty cycle	Continuous 100% ED
Type of protection (Hirschmann coil)	IP 65
Fluid viscosity	10 ÷ 500 mm²/s
Fluid temperature	-20°C ÷ 75° C
Ambient temperature	-20°C ÷ 60°C
Max. contamination level (filter $ß_{10} \geq 75$)	ISO 4406:1999: class 19/17/14 NAS 1638: class 8
Weight with single solenoid Weight with double solenoid	2.38 kg 2.77 kg

Solenoid	@ 9Vdc	@ 12Vdc	@ 24Vdc
Current supply	PWM (pulse width modulation)		
Max. current solenoid	2.35 A	1.76 A	0.88 A
Solenoid coil resistance at 25°C (77°F)	2.25 Ohm	4.0 Ohm	16.0 Ohm
PWM or superimposed dither frequency	100 ÷ 150 Hz		
Response time 0 ÷ 100% 100% ÷ 0	 32 ms 33 ms	 40 ms 33 ms	 85 ms 33 ms
Frequency response -3db (input signal 50% ±25% Vmax)	22 Hz	22 Hz	12 Hz

Operating specifications are valid for fluid with 46 mm²/s viscosity at 40°C, using the specified Dana Brevini electronic control units. (input voltage = 24V).

Accessories

REM.S.RA.*.*. REM.D.RA.*.*.	Card type control for single and double solenoid
CEP.S...	Electronic amplifier plug version for signle solenoid
MAV	Electronic module for integrate control of proportional valves and ON/OFF
JMPEI0M700101	Joystick with standard handle
JMPIU0M700138	Joystick Person present handle
Modular valves	CM3P (page 95) and CM3M (page 97)

Tab.1 - Mounting

Code	Symbol
C	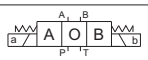
A	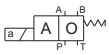
B	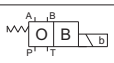

HYDRAULIC SYMBOLS

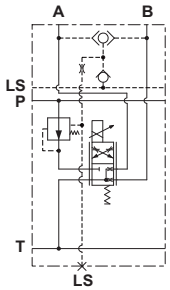

CXDH3AA03 ..

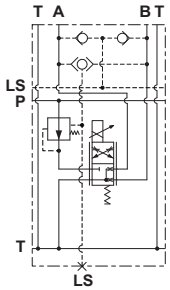

CXDH3AG03 ..

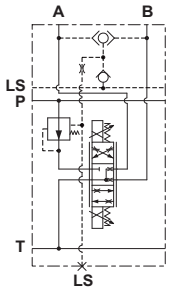

CXDH3CA03 ..

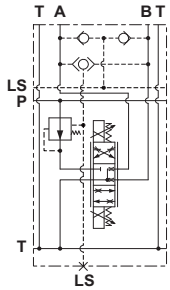

CXDH3CG03 ..

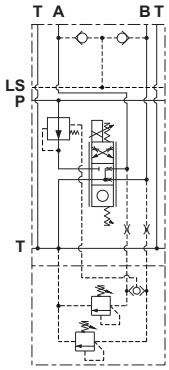

CXDH3AM03 ..

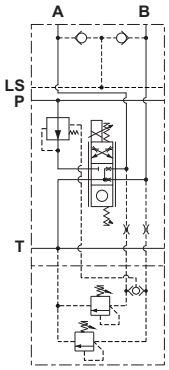

CXDH3AL03 ..

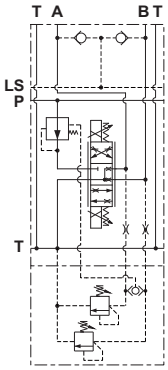

CXDH3CM03 ..

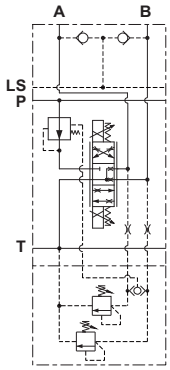

CXDH3CL03 ..

* Thanks to the design of the modular body (type G), an anti-shock modular valve can works same with CXDH3 valve energized or de-energized (see hydraulic symbol)

CHARACTERISTIC CURVES

I-Q curves - (Curves acquired with REM card, opening stroke)

Differential Pressure Δp = 8 bar

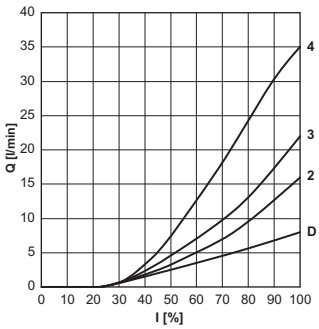

Differential Pressure Δp = 4 bar

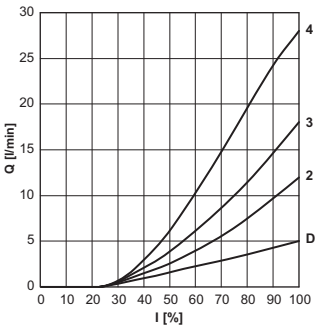

Compensation curves (curves acquired with FEH30.PQ inlet module)

Differential Pressure Δp = 8 bar

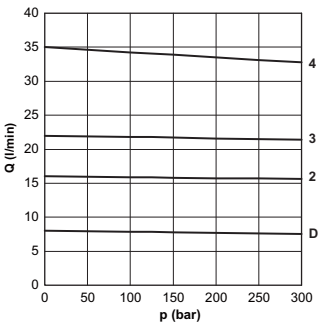

Differential Pressure Δp = 4 bar

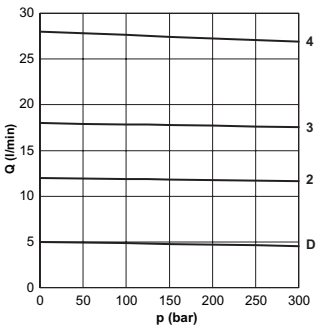

The fluid used is a mineral based oil with a viscosity of 46 mm²/s at 40°C. The tests have been carried out at with a fluid of a 40°C.

OVERALL DIMENSIONS

Body type A
Ports G3/8" Parallel

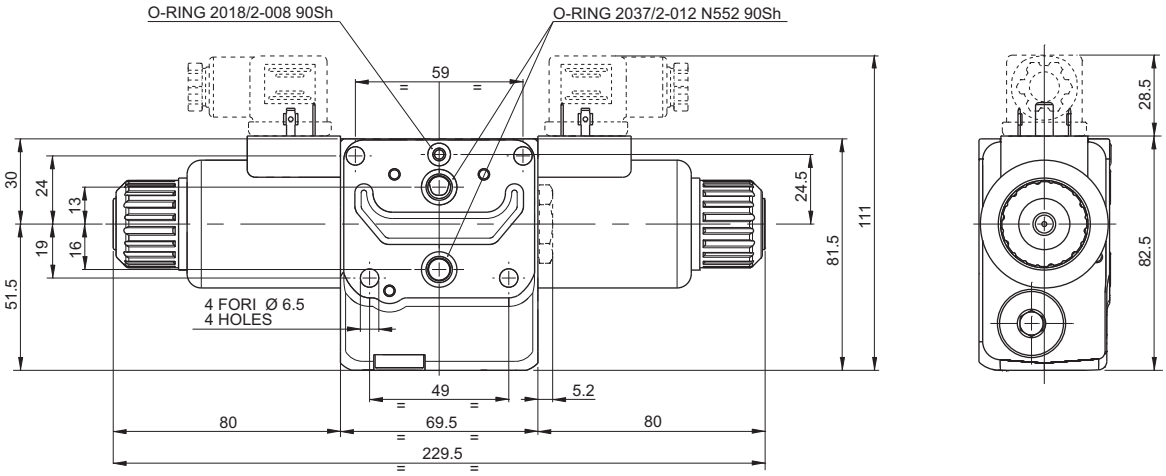

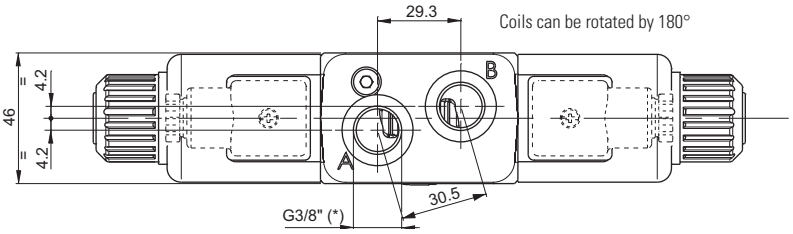

Fittings, max. tightening torque 60 Nm

Body type G
Interface for modular valves

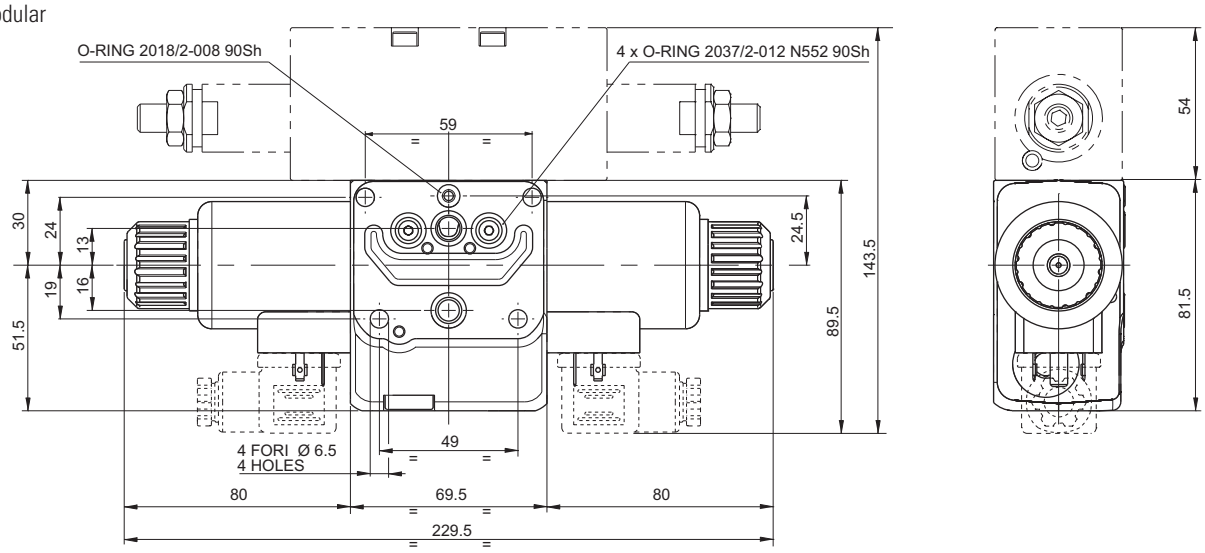

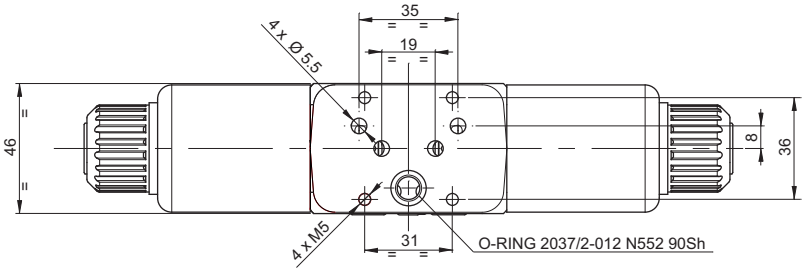

OVERALL DIMENSIONS

Body type L
Ports G3/8" parallel with valves LSA LSB

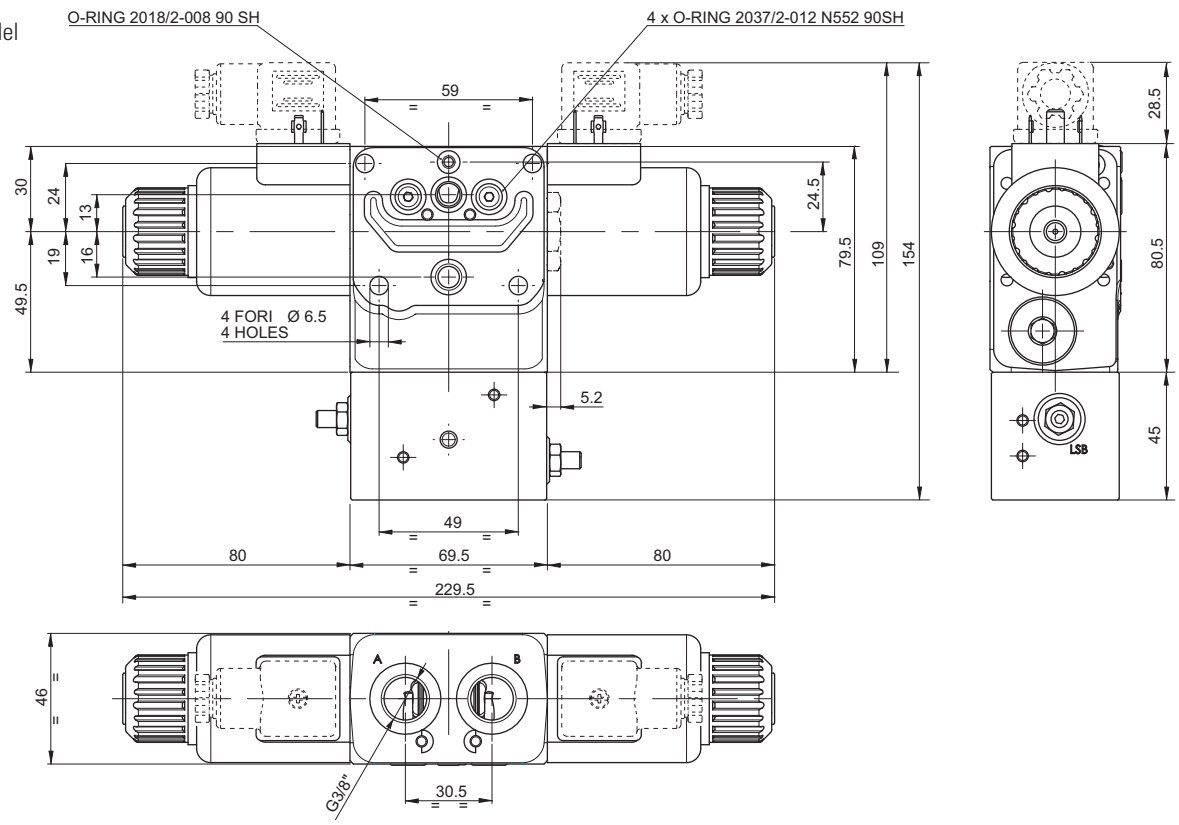

Body type M
Interface for modular valves with valves LSA LSB

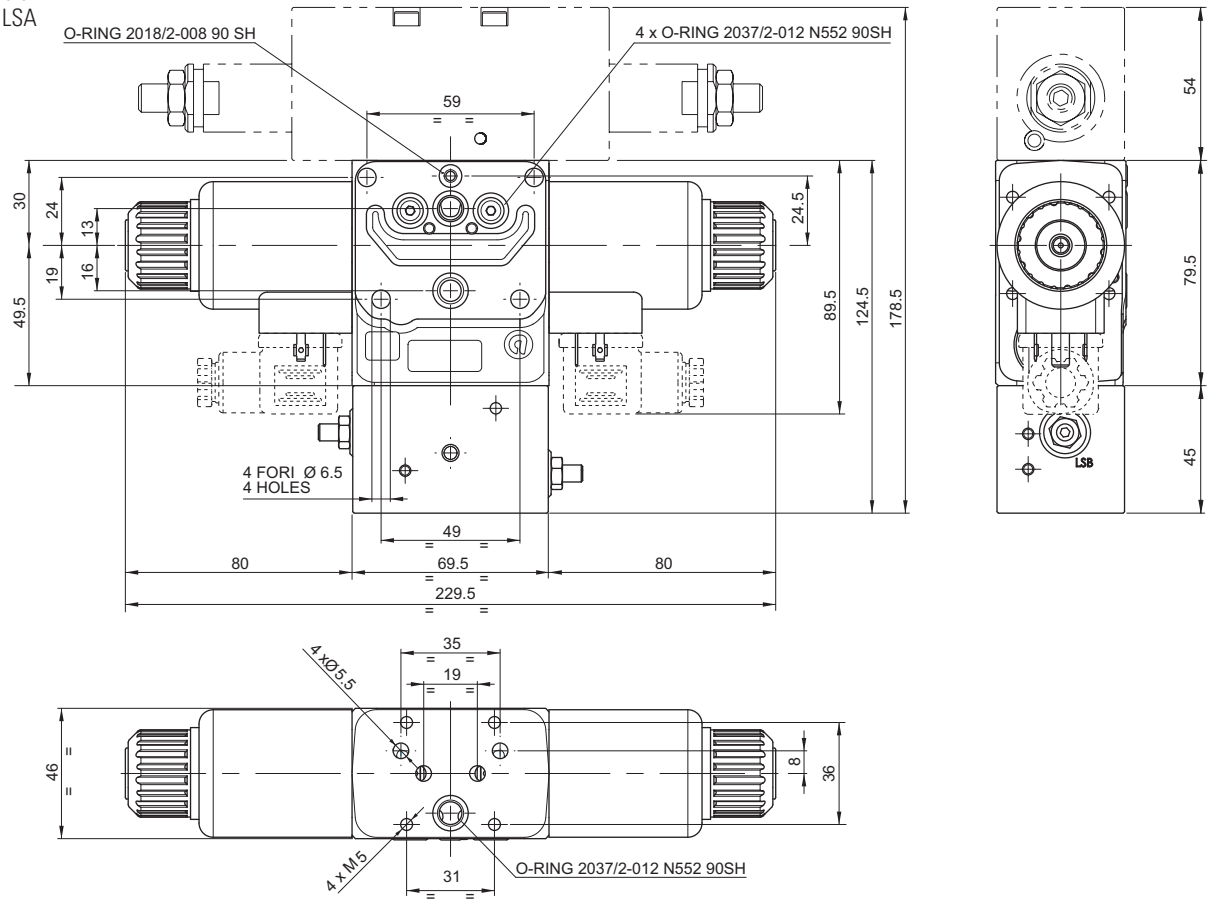

ON/OFF PRE COMPENSATED VALVES

ON/OFF Compensated Valves CDH3 with single or double solenoid, LS signal locally compensated.

- Used for controlling fluid direction and flow rate.
- Flow rate controlled by the valve predefined by a holed calibrated washer screwed into the port A and/or B.
- Flow regulation load independent . Load compensantion is achieved by a 2 way pressure compensator wich holds, the pressure drop constants across the proportional spool.
- Threaded ports G3/8"
- Emergency control.
- Standard connectors DIN 43650 ISO 4400, AMP Junior and Deutsch
- Cast iron zinc plated body.

Connector to be ordered separately, see page 105.

ORDERING CODE

CDH	On/Off compensated bankable valve
3	Size
*	Body type: **A** = Ports G3/8" parallel
E	Electrical operator
**	Spool (see table 1)
*	Mounting (see table 2)
**	Holed washer on port **A** (see table 3)
**	Holed washer on port **B** (see table 3) Omit if equal to screw on port A
*	Differential pressure Δp **8** = Δp 8 bar **4** = Δp 4 bar
*	Voltage (see table 4)
**	Variants (see table 5)
1	Serial No.

Calibrated diaphragms on P line, see page 104.

HYDRAULIC SYMBOL

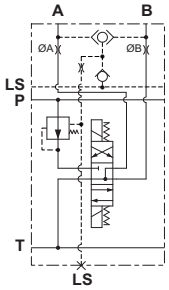

FEATURES

Max. operating pressure ports P/A/B	300 bar
Max. operating pressure ports T (Pressure dynamic allowed for 2 millions of cycles)	250 bar
Max flow	See table 3
Max excitation frequency	3 Hz
Duty cycle	100% ED
Type of protection (Hirschmann coil)	IP 65
Fluid viscosity	10 ÷ 500 mm²/s
Fluid temperature	-25°C ÷ 75°C
Ambient temperature	-25°C ÷ 60°C
Max. contamination level (filter $ß_{25} \geq 75$)	ISO 4406:1999: class 21/19/16 NAS 1638: class 10
Weight with single solenoid Weight with double solenoid	2.38 kg 2.77 kg
General flow tolerance	±10%

Operating specifications are valid for fluid with 46 mm²/s viscosity at 40°C, using the specified Dana Brevini electronic control units.

ORDERING CODE

Tab.1 - Spool

Two solenoids, spring centred "C" Mounting			
Code	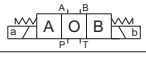	Covering	Transient position
01		+	(2)
02		-	
03		+	
04 (1)		-	(2)

One solenoid, side A "E" Mounting			
Code	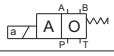	Covering	Transient position
01		+	(2)
02		-	
03		+	
04 (1)	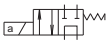	-	(2)
15		-	

One solenoid, side B "F" Mounting			
Code	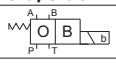	Covering	Transient position
01		+	(2)
02	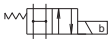	-	
03		+	
04 (1)		-	(2)
15		-	

Tab.2 - Mounting

Code	Symbol
C	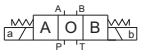
E	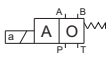
F	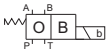
G (1)	
H (1)	

Tab.3 - Holed washer on port A / B

Code	Flow (l/min)	
	Δp = 8 bar	Δp = 4 bar
10	1.7	1.3
15	4.0	3.0
20	7.5	5.5
25	10.0	8.0
30	14.2	9.5
35	17.2	11.5
40	18.0	13.5
45	22.5	17.5
50	26.0	19.5
99	without holed washer	

Other flow rates available on request

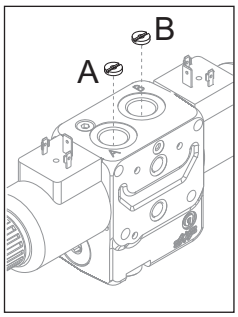

Interchangeable holed washer into fittings ports

Tab.4 - Coils D15 voltage (7)

Code	Voltage	Max. winding temperature (Ambient temperature 25°C)	Rated power W	Resistance @ 20°C (Ohm) ±10%
L	12 Vdc	110 °C	30	4.8
M	24 Vdc	110 °C	30	18.8
V (3)	28 Vdc	110 °C	30	25.6
N (3)	48 Vdc	110 °C	30	75.2
Z (4)	102 Vdc	110 °C	30	340
P (3)	110 Vdc	110 °C	30	387
X (5)	205 Vdc	110 °C	30	1375
W (6)	Without coils			

Tab.5 - Variants (7 - 8)

Code	Variant
S1	No variant
SV	Viton
LF	Emergency control lever (see page 72)
LR	Emergency control lever180° rotated (vedi pagina 72)
ES	Emergency button (vedi pagina 72)
P2 (9)	Rotary emergency button (vedi pagina 72)
R5 (9)	Rotary emergency b. 180° (vedi pagina 72)
AJ (10)	AMP Junior connection (vedi pagina 108)
AD (10)	AMP Junior and integr diode (vedi pagina 108)
SL (10)	Coil with flying leads 175 mm (vedi pagina 108)
CZ (10)	Coil with Deutsch DT04-2P (vedi pagina 109)
CX (10)	Deutsch DT04-2P connection and integr diode (see page 109)

(1) Specials with price increasing
(2) On spool **01** and **04** A and B ports are not sealed: fluid can escape from LS line (see hydraulic scheme).
(3) Special voltage
(4) With rectifier: 115 VAC/50Hz - 120 VAC/60Hz
(5) With rectifier: 230 VAC/50Hz - 240 VAC/60Hz
(6) Performance are guaranteed only using valves completed with coil
(7) Connector to be ordered separately, see page 105;
Coils technical data, see page 108 - 109;
(8) Other variants available on request. All the variants are considered without connectors.
(9) Tightening torque max. 6÷9 Nm (CH n. 22)
(10) Available in 12V or 24V DC voltage only.

OVERALL DIMENSIONS

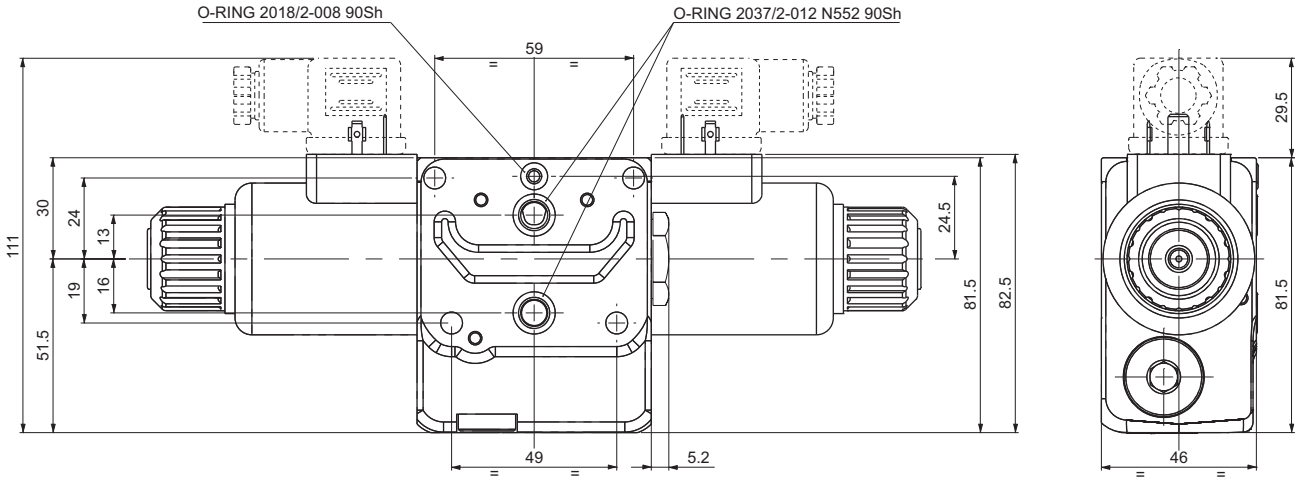

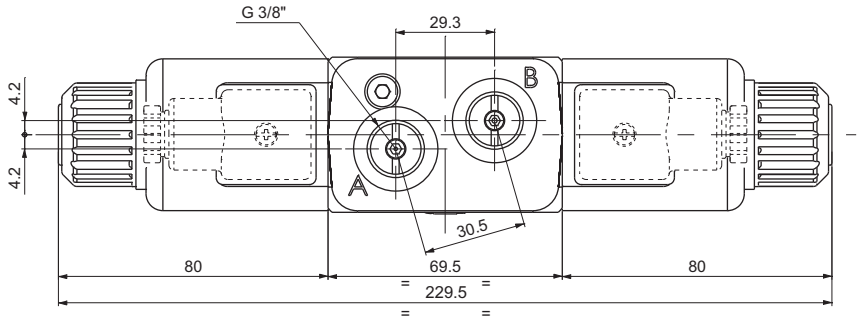

Fittings, max. tightening torque 60 Nm

"LF", "LR" AND "LV" VARIANTS - EMERGENCY CONTROL LEVER

Thanks to his flexibility, the component is designed to be inserted between the valve body and the spool, providing total interchangeability between the different types of solenoid body valves manufactured by Dana Brevini (*). The control can be used as an emergency device in the event of power cuts.

HYDRAULIC SYMBOL

Var. LF/LR lever on the side A:

Var. LV lever on the side B:

Spool **01** available on request

Max operating pressure port T	dynamic	160 bar
	static	210 bar
Mounting type Var. LF/LR Mounting type Var. LV		C - B - F - H C-A
Spools type		01-02-03-04 16-17-66
Weight with single solenoid Weight with double solenoid		3.34 kg 3.73 kg

* Max flow of proportional valves can be reduced compared to versions without emergency control lever when electrical operated. Max flow of proportional valves lever operated is increased compared to the max flow given when valves are electrical operated.

LF Variant (CXDH3 / CDH3)

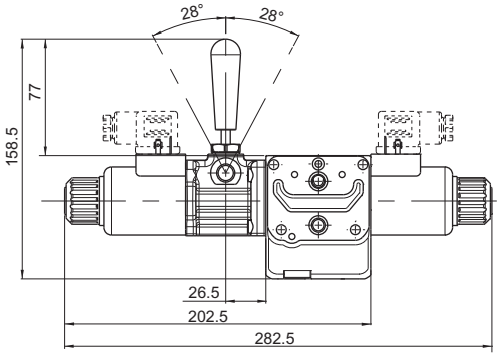

LF Variant Body L (CXDH3)

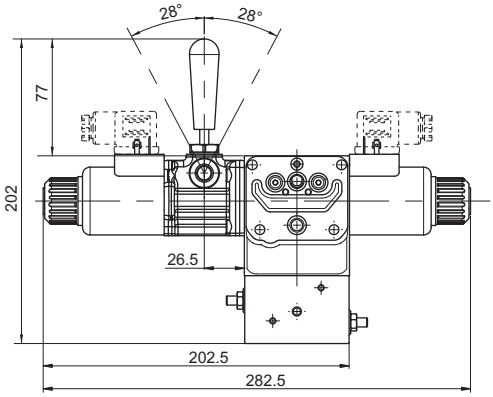

LR Variant (CXDH3 / CDH3)

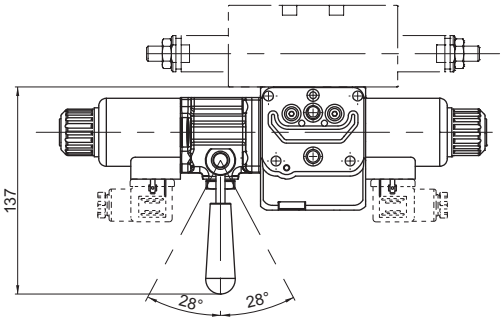

LR Variant M Body (CXDH3)

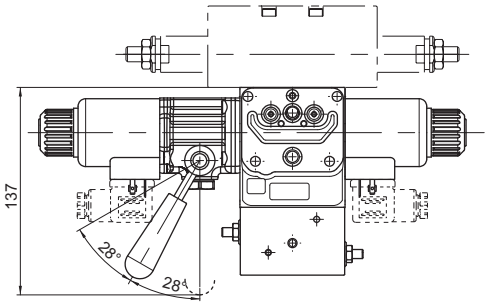

LV Variant (CXDH3 / CDH3)

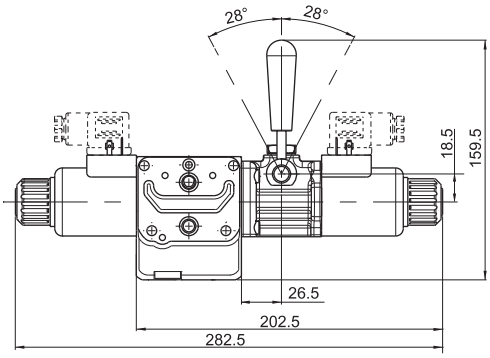

USE OF HSIF INTERFACE WITH MODULAR VALVES CXDH3/CDH3, WITH EMERGENCY LEVER

Distributor HPV41 right (DX, standard)

- Order modular valves CXDH3/CDH3 variant LV, with emergency lever on the side B

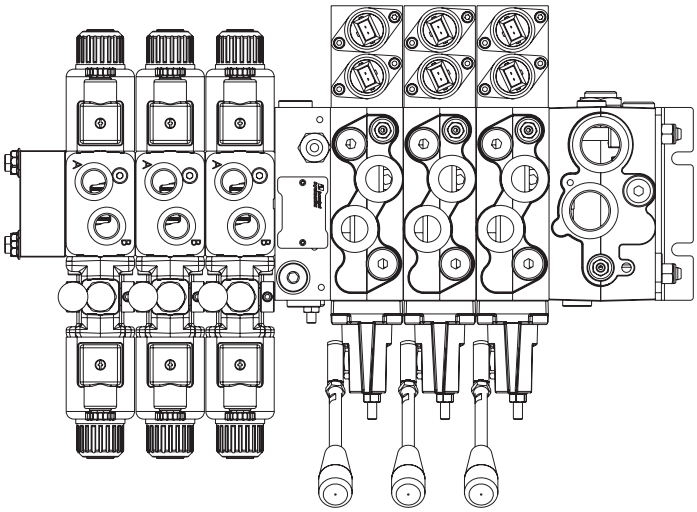

Distributor HPV41 left (SX)

- Order modular valves CXDH3/CDH3 variants LF / LR, with emergency lever on side A
- In this case it is not possible to mount the modular valve CXDH3/CDH3 variant LF / LR as the first element after HSIF interface.

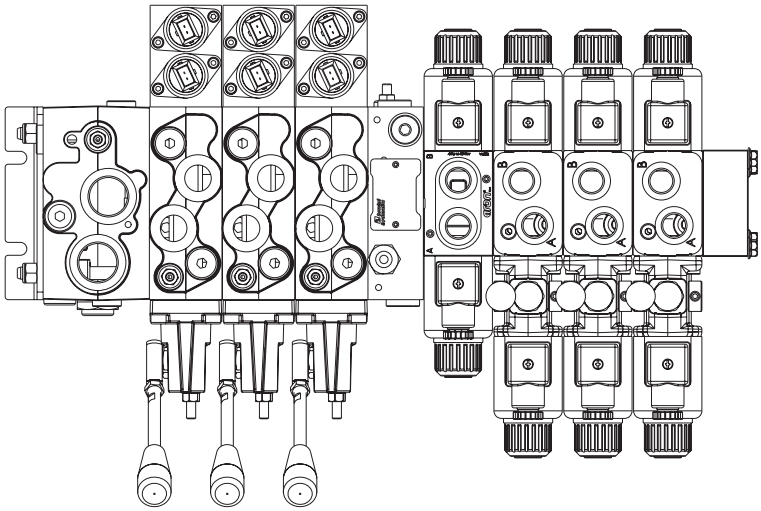

OTHER VARIANTS

"ES"
Manual emergency

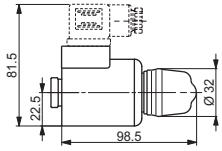

"P2"
Rotary emergency

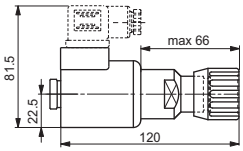

"R5"
Rotary emergency 180°

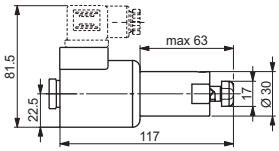

"AJ" AMP Junior
"AD" AMP Junior + Diode

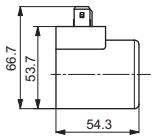

"CZ"
Deutsch DT04-2P

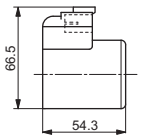

"SL"
Flying leads

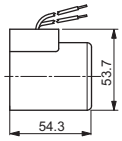

Emergency P2 and P5, tightening torque max. 6÷9 Nm (CH n. 22)

POST COMPENSATED FLOW SHARING VALVE HIGH EFFICIENCY ENERGY SAVING

Connector to be ordered separately, see page 105.

High efficiency energy saving valve FLOW SHARING

- High efficiency energy saving valve
- Compact dimensions
- Venting valves can be adopted to de-pilot pressure compensators on port A and/or B
- Valve's body with the same interface of all bankable valves range, so can be assembled with all existings valves, precompensated (CXDH3) included
- Cast iron zinc plated body.

ORDERING CODE

CFS	FLOW SHARING valve
3	Size
*	Mounting (see table 1)
*	Body type: **A** = Ports G3/8" parallel **P** = Ports G1/2" parallel **Q** = Ports SAE8 3/4"-16UNF parallel **G**= Interface for modular valves
**	Spool type (*1*) **03** =
N	Symmetrical flow path control
*	Nominal flow rating

*	Δp 14 bar from P to A,B
1	8 l/min
2	16 l/min
3	25 l/min
4	40 l/min
5 (*5*)	55 l/min

*	Max. current at solenoid (*2*): **E** = 2.35 A (9 Vdc) - Special coil **F** = 1.76 A (12 Vdc) **G** = 0.88 A (24 Vdc)
**	Variants (*3*): **S1** = No variant **LF/LV** = Emergency control lever (*4*) For body type G order LR variant (emergency lever 180° rotated) **SV** = Viton **ES** = Emergency button (*4*) **P2**= Rotary emergency (*4*) **R5** = Rotary emergency 180° (*4*) **AJ** = AMP Junior coil (see page 111) **CZ** = Deutsch DT04-2P coil (see page 111)
1	Serial No.

Calibrated diaphragms on P line, see page 104.

(*1*) Available spool 01 A and B ports are not sealed.
(*2*) Coils technical data, see page 111
Voltage codes are not stamped on the plate, their are readable on the coils
(*3*) Connector to be ordered separately, see page 105; Other variants available on request.
(*4*) Emergency see page77
(*5*) Only for emergency lever
(*6*) With FH35PQ you can set a Δp variable (from LS and P); with FEH30PQ the Δp is fixed at 13 bar

FEATURES

Max. operating pressure	310 bar
Max. operating pressure ports T (Pressure dynamic allowed for 2 millions of cycles)	250 bar
Regulated flow rate (A / B ports) (*6*)	up to 55 l/min (Δp 14 bar) up a 60 l/min (Δp 18 bar)
Relative duty cycle	Continuous 100% ED
Type of protection (Hirschmann coil)	IP 65
Fluid viscosity	10 ÷ 500 mm²/s
Fluid temperature	-20°C ÷ 75° C
Ambient temperature	-20°C ÷ 60°C
Max. contamination level (filter $ß_{10} \geq 75$)	ISO 4406:1999: class 19/17/14 NAS 1638: class 8
Weight with single solenoid Weight with double solenoid	3.70 kg 4.20 kg

Solenoid	@ 9Vdc	@ 12Vdc	@ 24Vdc
Current supply	PWM (pulse width modulation)		
Max. current solenoid	2.35 A	1.76 A	0.88 A
Solenoid coil resistance at 25°C (77°F)	2.25 Ohm	4.0 Ohm	16.0 Ohm
PWM or superimposed dither frequency	100 ÷ 150 Hz		
Response time 0 ÷ 100% 100% ÷ 0	 32 ms 33 ms	 40 ms 33 ms	 85 ms 33 ms
Frequency response -3db (input signal 50% ±25% Vmax)	22 Hz	22 Hz	12 Hz

Operating specifications are valid for fluid with 46 mm²/s viscosity at 40°C, using the specified Dana Brevini electronic control units. (input voltage = 24V).

Accessories

REM.S.RA.*.*. REM.D.RA.*.*.	Card type control for single and double solenoid
CEP.S...	Electronic amplifier plug version for signle solenoid
MAV	Electronic module for integrate control of proportional valves and ON/OFF
JMPEI0M700101	Joystick with standard handle
JMPIU0M700138	Joystick Person present handle
Modular valves	CM3P (page 95) and CM3M (page 97)

Tab.1 - Mounting

Code	Symbol
C	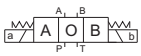
A	
B	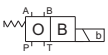

HYDRAULIC SYMBOLS

Spool 01 mounting C-A-B

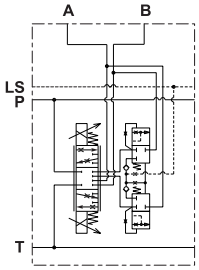

CFS3C.01 ..

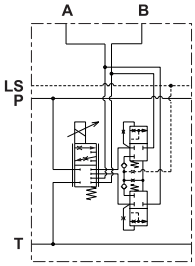

CFS3A.01 ..

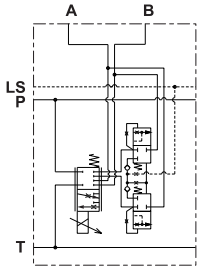

CFS3B.01 ..

Spool 03 mounting C-A-B

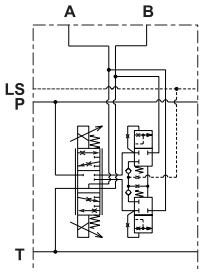

CFS3C.03 ..

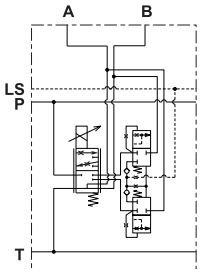

CFS3A.03 ..

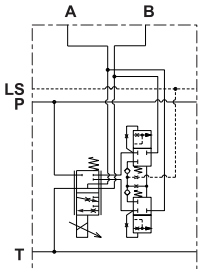

CFS3B.03 ..

CHARACTERISTIC CURVES

Q-I curves with Δp 14bar

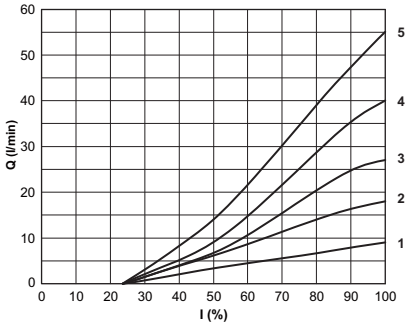

Compensation curves

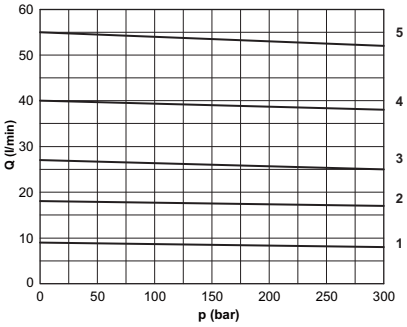

Curves	Flow
1	8 l/min
2	16 l/min
3	25 l/min
4	40 l/min
5	55 l/min

OVERALL DIMENSIONS

Body
A = Ports G3/8" parallel
P = Ports G1/2" parallel
Q = Ports SAE8 3/4"-16UNF parallel

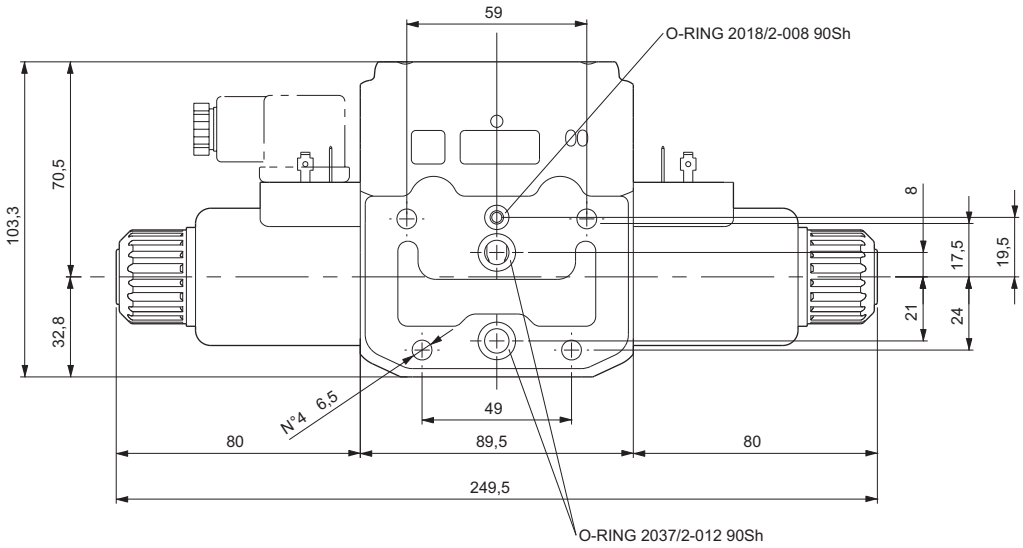

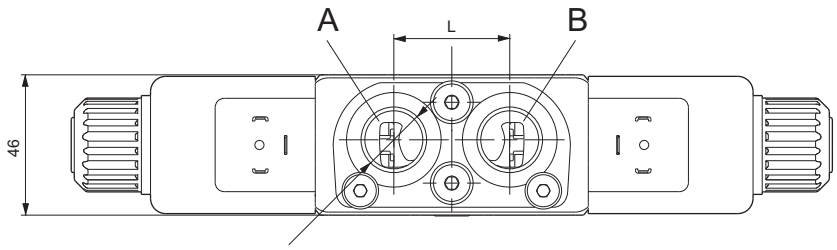

A = G3/8" L= 30,5
P = G1/2" L=38,00
Q = SAE8 3/4"-16UNF L=38,00

Body type G
Interface for modular valves

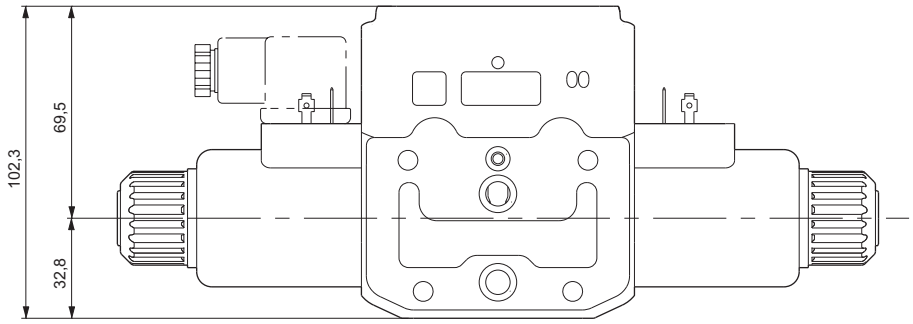

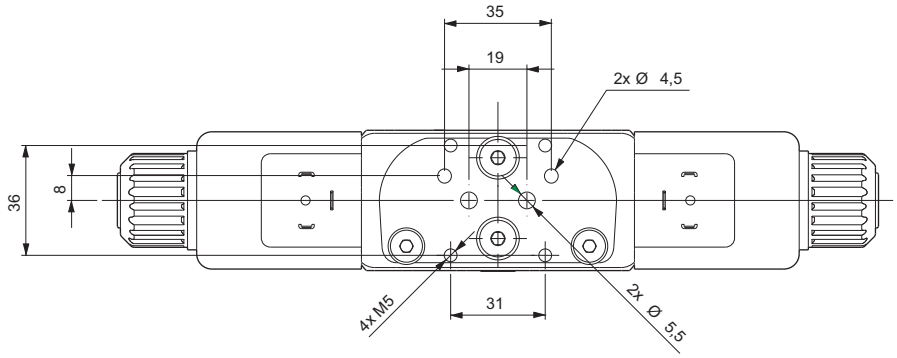

Fittings, max. tightening torque 60 Nm

"LF", "LR" AND "LV" VARIANTS - EMERGENCY CONTROL LEVER

Thanks to his flexibility, the component is designed to be inserted between the valve body and the spool, providing total interchangeability between the different types of solenoid body valves manufactured by Dana Brevini (*). The control can be used as an emergency device in the event of power cuts.

HYDRAULIC SYMBOL

Var. LF/LR lever on the side A:

Var. LV lever on the side B:

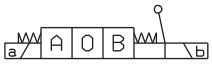

Max operating pressure port T	dynamic	160 bar
	static	210 bar
Mounting type Var. LF/LR Mounting type Var. LV		C - B C - A
Spools type		01 - 03

* Max flow of proportional valves can be reduced compared to versions without emergency control lever when electrical operated. Max flow of proportional valves lever operated is increased compared to the max flow given when valves are electrical operated.

LF Variant

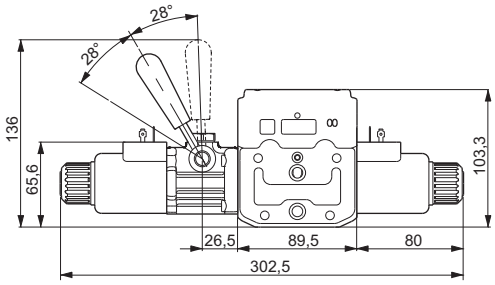

LV Variant

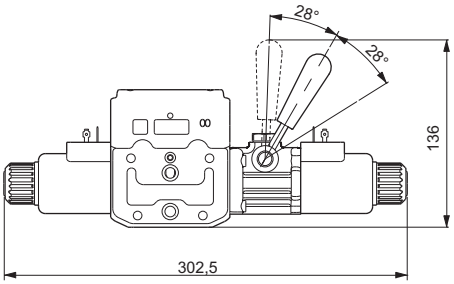

LR Variant

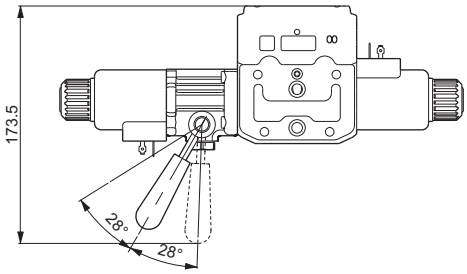

OTHER VARIANTS

"ES"
Manual emergency

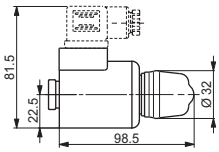

"P2"
Rotary emergency

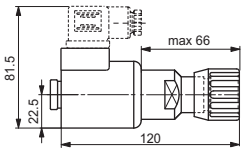

"R5"
Rotary emergency 180°

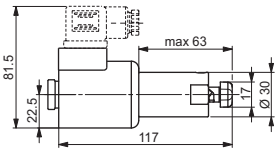

"AJ" AMP Junior
"AD" AMP Junior + Diode

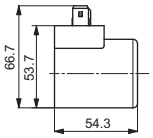

"CZ"
Deutsch DT04-2P

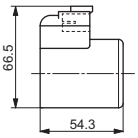

Emergency P2 and P5, tightening torque max. 6÷9 Nm (CH n. 22)

INTERMEDIATE ELEMENT FOR PRE AND POST COMPENSATED VALVES

Intermediate element FIH3L with pass through P-T and LS lines.

- Suggested in assemblies with more than 8 elements in order to give better support and stability.
- Maximum flow 80 l/min.
- Cast iron zinc plated body or aluminum (AL variant).

HYDRAULIC SYMBOLS

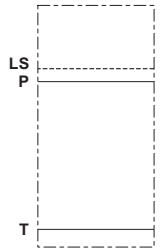

ORDERING CODE

FIH	Intermediate element
3	Size
L	With LS line
**	**00** = No variant (cast iron body) **AL** = Aluminum body **V1** = Viton
1	Serial No.

Mounting kit (screws and tie rods)contact our customer service.

FEATURES

Max. operating pressure	300 bar (cast iron) 250 bar (aluminum)
Max. Flow	80 l/min
Hydraulic fluid	DIN 51524 Mineral oils
Fluid viscosity	10 ÷ 500 mm²/s
Fluid temperature	-25°C ÷ 75°C
Ambient temperature	-25°C ÷ 60°C
Max. contamination level (filter ß25 ≥ 75)	ISO 4406:1999: class 21/19/16 NAS 1638: class 10
Weight	1.6 kg (cast iron) 0.59 kg (aluminum)

OVERALL DIMENSIONS

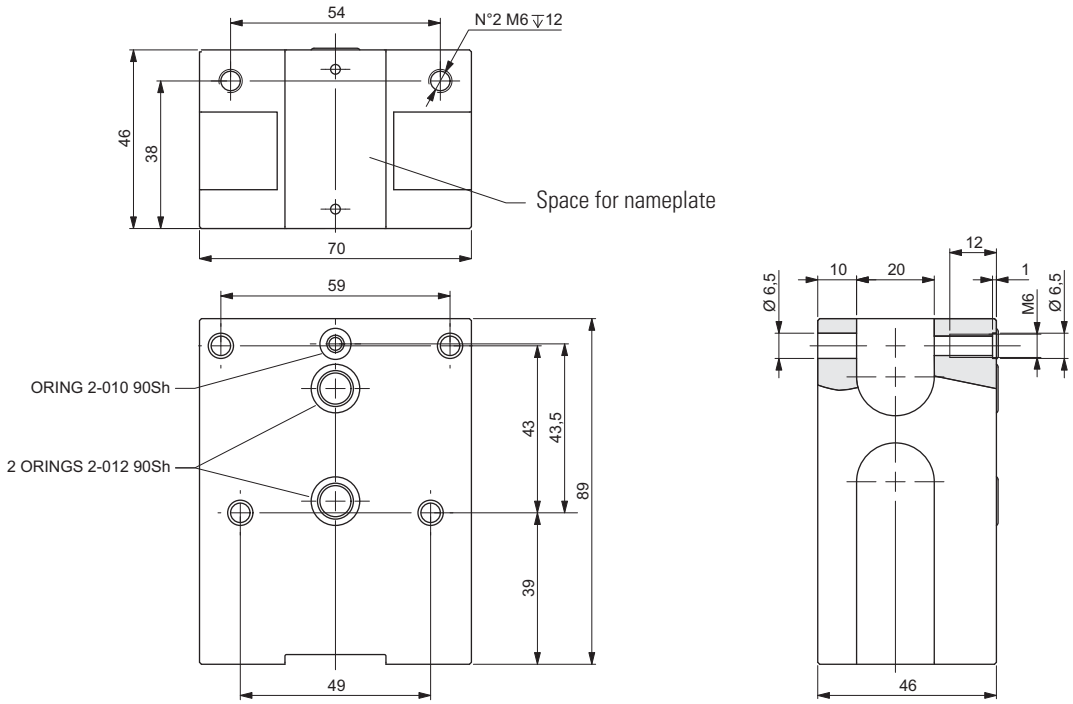

OUTLET MODULE UNITS

Outlet module units FUH
- Threaded ports (T) sizes G3/4"
- Only for parallel connections
- Maximum flow 80 l/min.
- Cast iron zinc plated body.

HYDRAULIC SYMBOL

ORDERING CODE

FUH	Outlet module unit
3	Size
5	Port size: **5** = G3/4"
00	**00** = No variants
1	Serial No.

FEATURES

Max. operating pressure	300 bar
Max. Flow	80 l/min
Hydraulic fluids	Mineral oils DIN 51524
Fluid viscosity	10 ÷ 500 mm²/s
Fluid temperature	-25° ÷ 75° C
Ambient temperature	-25°C ÷ 60°C
Max. contamination level (filter $ß_{25} \geq 75$)	ISO 4406:1999: class 21/19/16 NAS 1638: class 10
Weight	1.2 kg

OVERALL DIMENSIONS

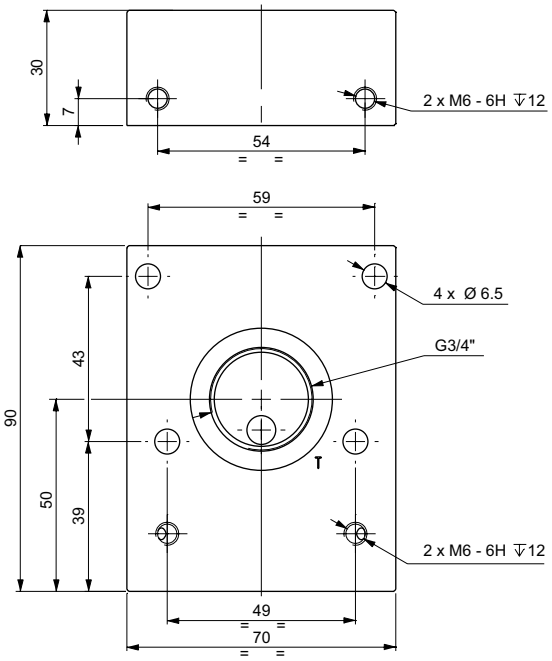

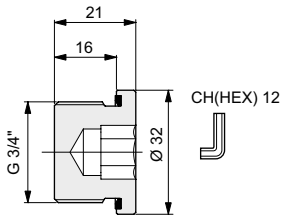

Plug with gasket (optional) to close port T
Code: Q26630010

SIZE 10

ON/OFF VALVES

Introduction

- Compact bankable valves with flow rates up to 80 l / min;
- High efficiency coils;
- Available ON/OFF directional control bankable valve;
- Available for parallel circuits;
- Assemblable with SIZE 6 valves.

Overall dimensions with CD5 valves

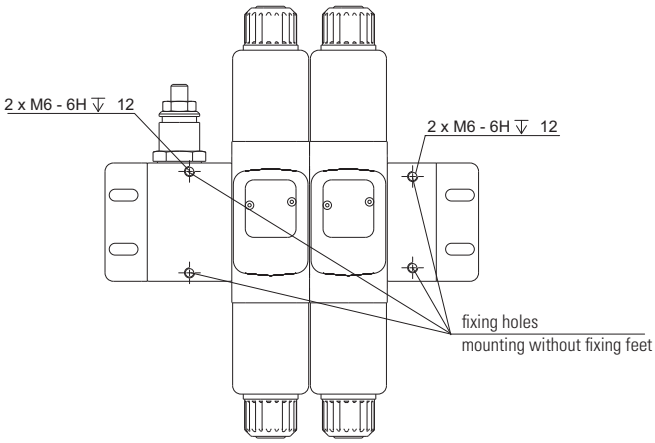

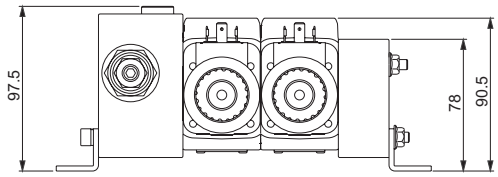

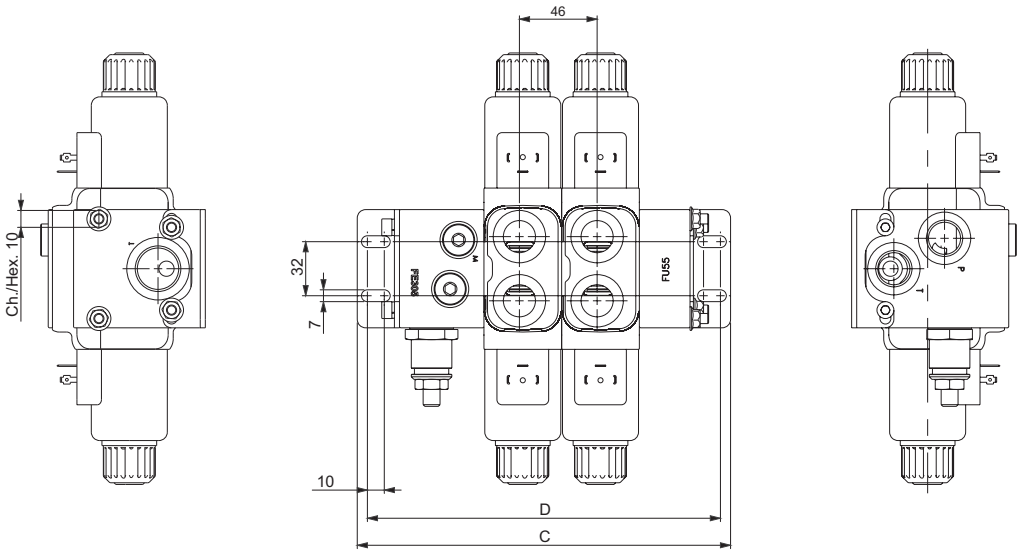

No. elements	Inlet module			
	FE5		FE305	
	C mm	D mm	C mm	D mm
2	201	189	221	209
3	247	235	267	255
4	293	281	313	301
5	339	327	359	347
6	385	373	405	393

Composition form

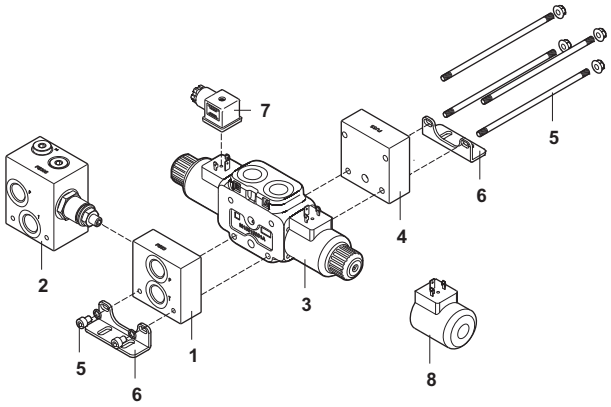

Ref.	Type	Description	Page
1	FE5	Inlet module units no pressure relief valve	84
2	FE305	Inlet module units with pressure relief valve	85
3	CD5	Directional control bankable valve	87
4	FU5	Outlet module units	90
5	—	Mounting kit	101
6	—	Fixing feet	103
7	—	Connectors	105
8	—	Coils	110

SIZE 10 valves CD5 can be assembled with:
- **valves CDC3, CD3, CX3 (page 6);**
- **valves CXDH3, CDH3, CFS3 (page 56);**

To obtain the best performances, we suggest to assemble the working sections with higher flow rate near the inlet module, leaving the ones with lower flow at the end of the assembled valve.

How to order
To order the assembly, specify the codes in progressive order (inlet, valves, outlet, mounting kit, feet). See example page 116.

For any further special version not shown in this catalogue, please contact our Technical Department.

INLET MODULE UNITS NO PRESSURE RELIEF VALVE

Module units FE5 no pressure relief valve.

- Threaded ports (P and T), G1/2"
- Maximum flow 80 l/min
- Cast iron zinc plated body.

FEATURES

Max. operating pressure	310 bar
Max. Flow	80 l/min
Hydraulic fluid	DIN 51524 Mineral oils
Fluid viscosity	10 ÷ 500 mm²/s
Fluid temperature	-25°C ÷ 75°C
Ambient temperature	-25°C ÷ 60°C
Max. contamination level (filter $ß_{25} \geq 75$)	ISO 4406:1999: class 21/19/16 NAS 1638: class 10
Weight	0.94 kg

HYDRAULIC SYMBOL

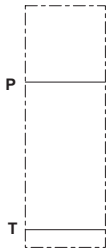

ORDERING CODE

FE	Inlet module unit no pressure relief valve
5	Size
3	Port sizes: **3** = G1/2"
**	**00** = No variant **V1** = Viton
1	Serial No.

OVERALL DIMENSIONS

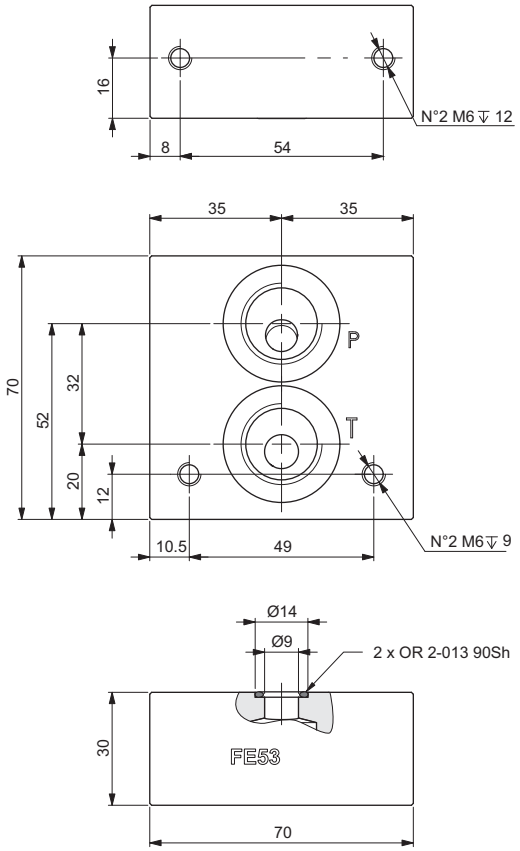

INLET MODULE UNITS WITH PRESSURE RELIEF VALVE

Module units FE305 with CMP30 adjustable pressure relief valve.

- Manual adjustment with a grub screw or plastic knob.
- Threaded ports P-T sizes G1/2"
- Maximum flow 80 l/min.
- Cast iron zinc plated body.

FEATURES

Max. operating pressure	310 bar
Max. Flow	80 l/min
Hydraulic fluid	DIN 51524 Mineral oils
Fluid viscosity	10 ÷ 500 mm²/s
Fluid temperature	-25°C ÷ 75°C
Ambient temperature	-25°C ÷ 60°C
Max. contamination level (filter $ß_{25} \geq 75$)	ISO 4406:1999: class 21/19/16 NAS 1638: class 10
Weight	1.85 kg

Pressure relief valve (CMP30...)	
Setting range (*):	
Spring 1	max 50 bar
Spring 2	max 140 bar
Spring 3	max 350 bar

(*) The minimum permissible setting pressure depending on the spring: see curves.

HYDRAULIC SYMBOL

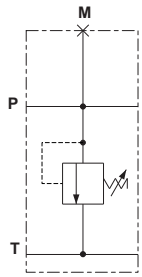

ORDERING CODE

FE30	Inlet module unit (up to 80 l/min) with pressure relief valve
5	Size
3	Port sizes: **3** = G1/2"
*	Adjustment: **M** = Plastic knob **C** = Grub screw
*	Setting ranges **1** = max. 50 bar (white spring) **2** = max. 140 bar (yellow spring) **3** = max. 350 bar (green spring)
**	**00** = No variant **V1** = Viton
1	Serial No.

PRESSURE-FLOW RATE

Pressure Flow

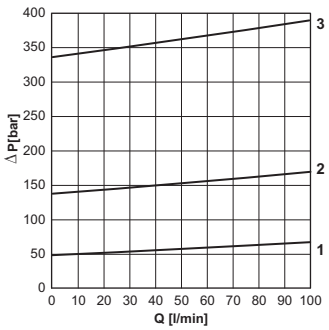

MIN.SETTING PRESSURE

Minimun setting pressure

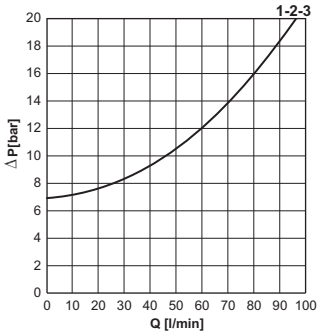

1 = max 50 - bar - **2** = max 140 bar - **3** = max 350 bar
Fluid used: mineral based oil with viscosity 46 mm²/s at 40°C.

OVERALL DIMENSIONS

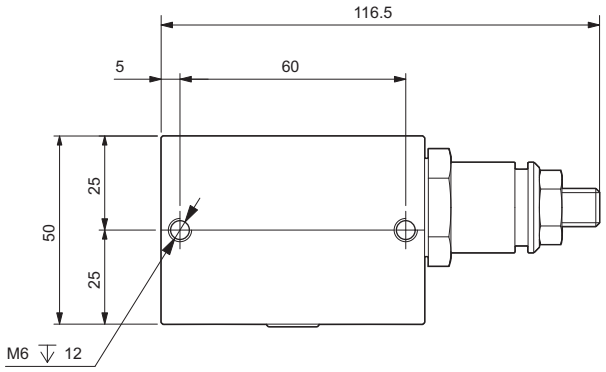

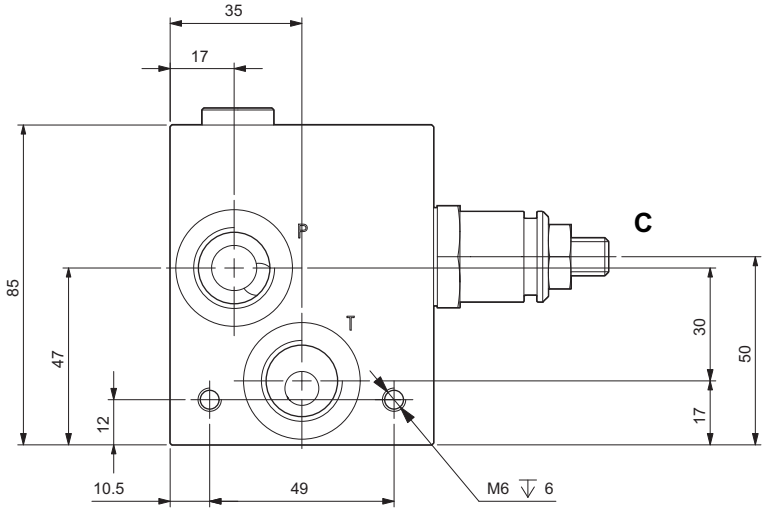

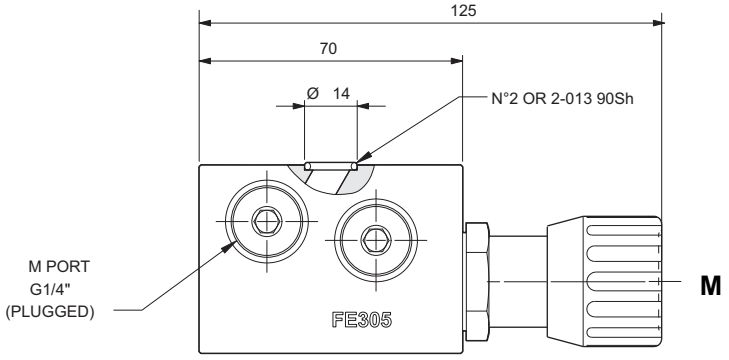

C = Grub screw
M = Plastic knob

DIRECTIONAL CONTROL BANKABLE VALVE

Directional control bankable valve CD5 with single or double solenoid.

- Centring achieved by means of calibrated length springs which immediately reposition the spool in the neutral position when the electrical signal is shut off.
- Emergency control.
- Threaded ports sizes G1/2"
- Coils protection IP66
- Standard connectors DIN 43650 ISO 4400 and Deutsch
- Maximum flow until 80 l/min.
- Cast iron zinc plated body.

ORDERING CODE

CD	Directional control bankable valve
5	Size
N	Body parallel, ports G1/2"
E	Electrical operator
**	Spool (tab.2)
*	Mounting (tab.3)
*	Voltage (tab.4)
**	Variants (tab.5)
1	Serial No.

FEATURES

Max. pressure ports P/A/B/T	310 bar
Max. pressure port T	250 bar
Max. Flow	80 l/min
Max excitation frequency	3 Hz
Duty cycle	100% ED
Hydraulic fluid	DIN 51524 Mineral oils
Fluid viscosity	10 ÷ 500 mm^2/s
Fluid temperature	-25°C ÷ 75°C
Ambient temperature	-25°C ÷ 60°C
Max. contamination level (filter $ß_{25} \geq 75$)	ISO 4406:1999: class 21/19/16 NAS 1638: class 10
Weight with one solenoid Weight with two solenoids	2.68 kg 3.07 kg

ORDERING CODE

Tab.1 - Standard spools

Two solenoids,spring centred "C" Mounting			
Code	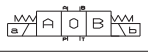	Covering	Transient position
01	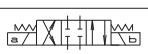	+	
03		+	

One solenoid, side A "E" Mounting			
Code		Covering	Transient position
01		+	
03		+	

One solenoid, side B "F" Mounting			
Code	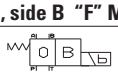	Covering	Transient position
01	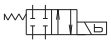	+	
03		+	

Tab.2 - Mounting

Code	Symbol
C	
E	
F	

Tab.3 - 40W coils D15 voltage (1)

Code	Voltage	Max. winding temperature (Ambient temperature 25°C)	Rated power W	Resistance @ 20°C (Ohm) ±10%
L	12 Vdc	135 °C	40	3.6
M	24 Vdc	135 °C	40	14.4
W (2)	Without coils			

Tab.4 - Variants (1 - 4)

Code	Variant
S1	No variant
SV	Viton
ES	Emergency button (see page 89)
P2 (3)	Rotary emergency button (see page 89)
R5 (3)	Rotary emergency b. 180° (see page 89)
CZ	Deutsch DT04-2P - 40W connection (see page 110)

(1) Connector to be ordered separately, see page 105
Coils technical data, see page 110
Voltage codes are not stamped on the plate, their are readable on the coils
(2) Performance are guaranteed only using valves completed with coil
(3) Tightening torque max. 6÷9 Nm (CH n. 22)
(4) Other variants available on request

PRESSURE DROPS

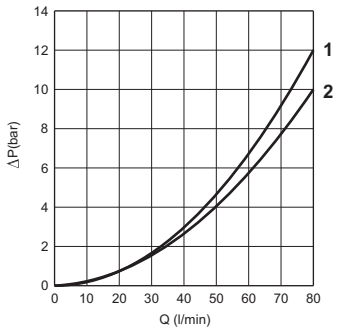

1 = P > A,B
2 = A,B > T

The diagram at the side shows the pressure drop curves for spools during normal usage.
The fluid used is a mineral oil with a viscosity of 46 mm²/s at 40 C°; the tests have been carried out at a fluid temperature of 40 C°.

LIMITS OF USE

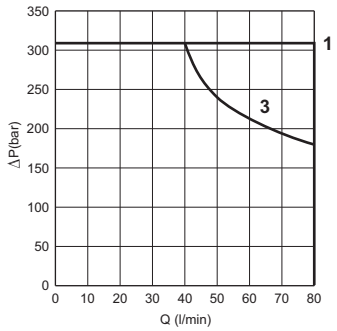

1 = Spool 01
3 = Spool 03

The tests have been carried out with solenoids at operating temperature and a voltage 10% less than rated voltage with a fluid temperature of 50 C°. The fluid used was a mineral oil with a viscosity of 46 mm²/s at 40 degrees C.
Spool 01: in neutral position can have leaks.

OVERALL DIMENSIONS

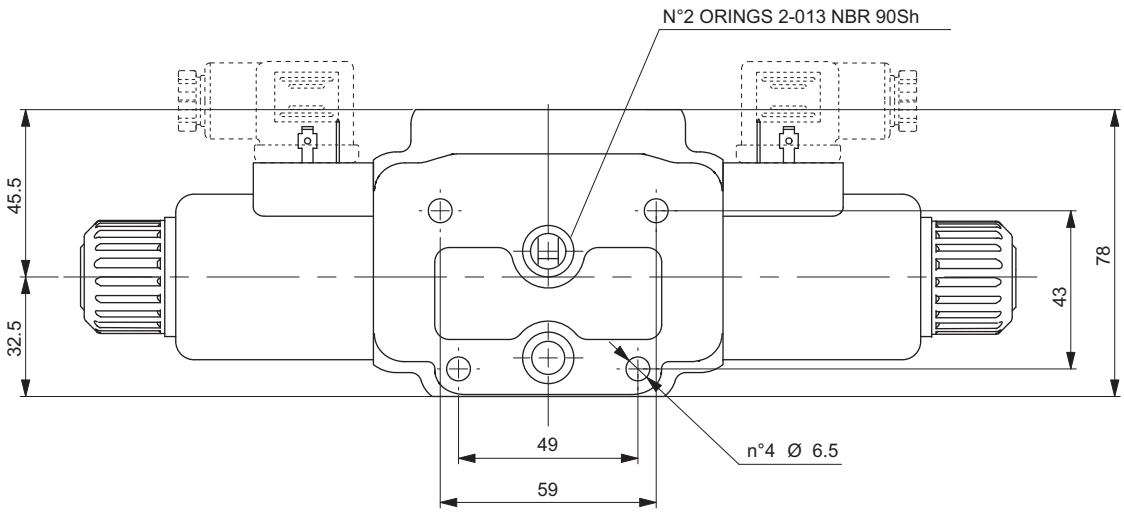

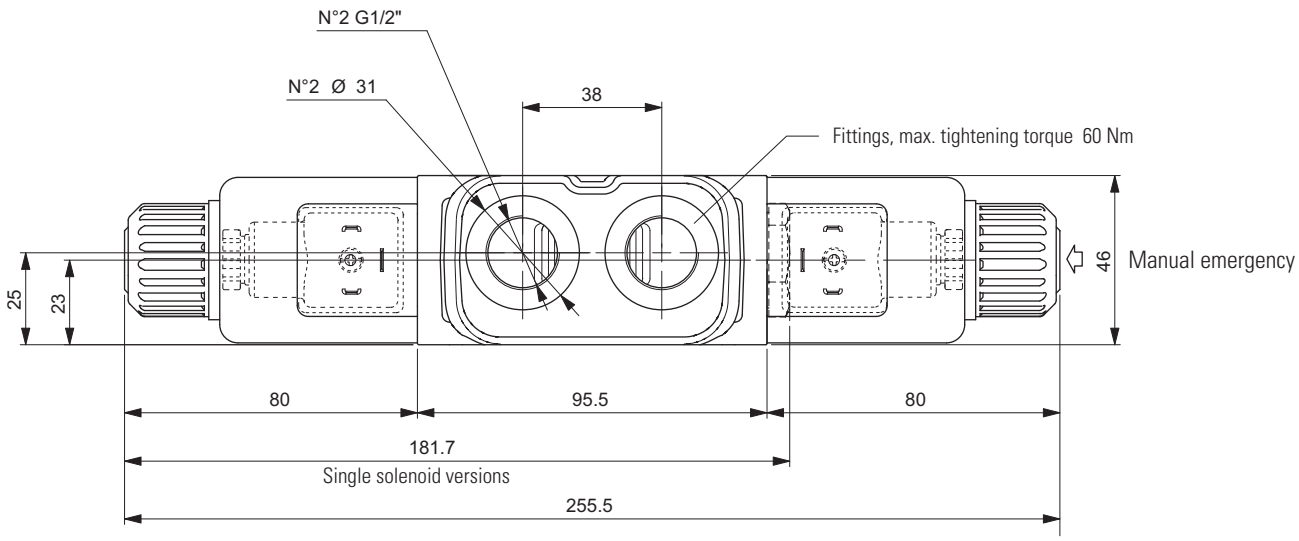

VARIANTS

"ES"
Manual emergency

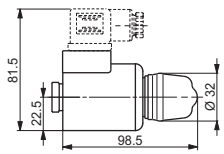

"P2"
Rotary emergency

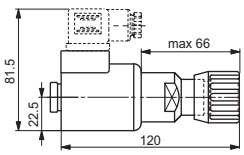

"R5"
Rotary emergency 180°

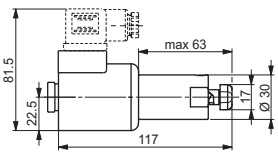

"CZ" Deutsch DT04-2P
"R6" Deutsch DT04-2P eCoat treatment

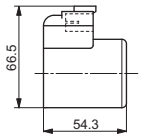

Emergency P2 and P5, tightening torque max. 6÷9 Nm (CH n. 22)

OUTLET MODULE UNITS

Outlet module units FU5.

- Threaded ports (T) sizes G3/8".
- Maximum flow 80 l/min.
- Cast iron zinc plated body.

FEATURES

Max. operating pressure	310 bar
Max. Flow	80 l/min
Hydraulic fluid	DIN 51524 Mineral oils
Fluid viscosity	10 ÷ 500 mm^2/s
Fluid temperature	-25°C ÷ 75°C
Ambient temperature	-25°C ÷ 60°C
Max. contamination level (filter $ß_{25} \geq 75$)	ISO 4406:1999: class 21/19/16 NAS 1638: class 10
Weight	0.95 kg

HYDRAULIC SYMBOLS

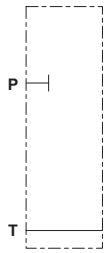

OVERALL DIMENSIONS

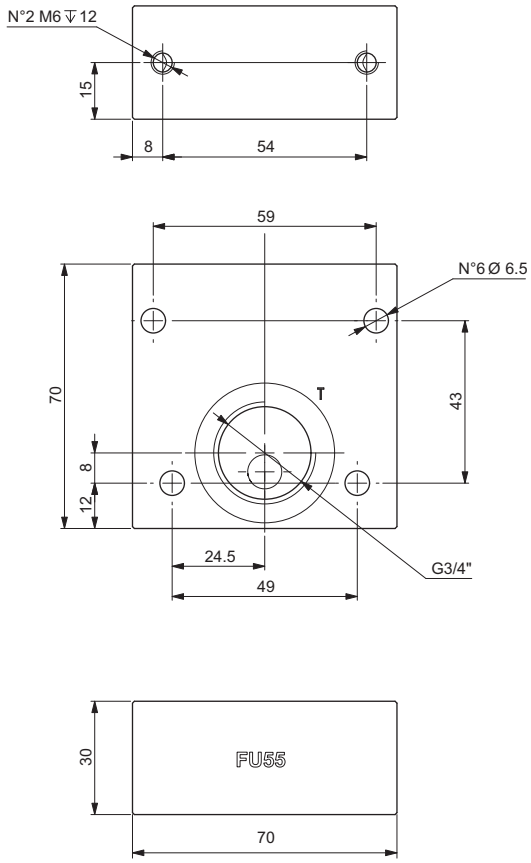

ORDERING CODE

FU	Outlet module unit
5	Size
5	Port size: **5** = G3/4"
00	**00** = No variants
1	Serial No.

MODULAR ELEMENTS

(Applicability with SIZE 6 valves, see pages 8, 58)

INTERMEDIATE ELEMENT WITH FLOW REGULATOR ON A AND B LINES

Intermediate element V08000005 with flow regulator on A and B lines

- Intermediate mounting to combine with valves CM3F/CM3P/CM3M
- One way non-compensated throttle valves adjustable by means of a grub screw on A and B lines.
- Maximum flow 20 l/min.
- Cast iron zinc plated body.

FEATURES

Max. operating pressure	250 bar
Flow rate regulation	on 6 screw turns
Max. Flow	20 l/min
Hydraulic fluid	DIN 51524 Mineral oils
Fluid viscosity	10 ÷ 500 mm^2/s
Fluid temperature	-25°C ÷ 75°C
Ambient temperature	-25°C ÷ 60°C
Max. contamination level (filter $ß_{25} \geq 75$)	ISO 4406:1999: class 21/19/16 NAS 1638: class 10
Weight	1.3 kg

HYDRAULIC SYMBOL

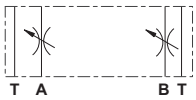

ORDERING CODE

V08000005	Element with flow regulator on A and B lines

OVERALL DIMENSIONS

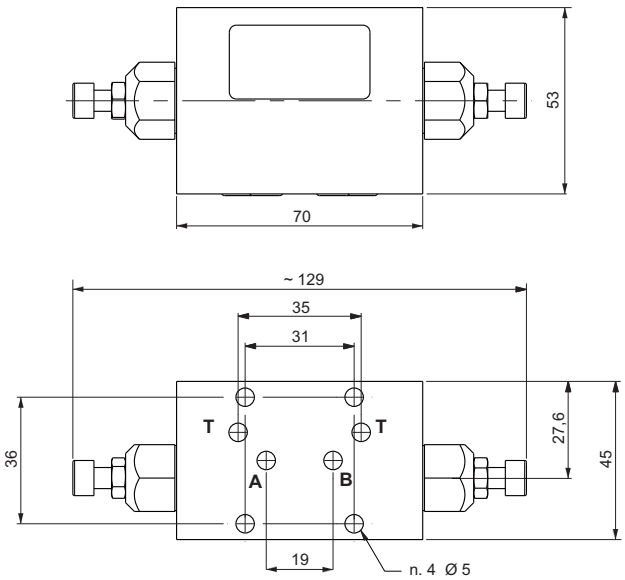

FLOW REGULATION

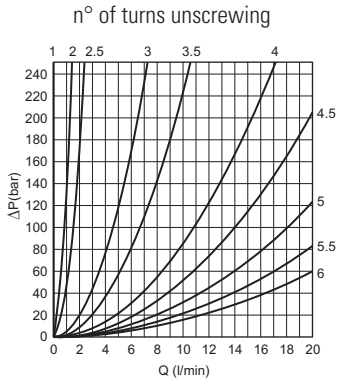

INTERMEDIATE ELEMENT WITH PILOT OPERATED CHECK STACKABLE VALVES

Modular pilot operated check stackable valves V08000002
- Intermediate mounting to combine with valves CM3F/CM3M
- Double A and B lines;
- Cast iron zinc plated body.

FEATURES

Max. operating pressure	250 bar
Minimum opening pressure	5 bar
Max. Flow	20 l/min
Hydraulic fluid	DIN 51524 Mineral oils
Fluid viscosity	10 ÷ 500 mm^2/s
Fluid temperature	-25°C ÷ 75°C
Ambient temperature	-25°C ÷ 60°C
Max. contamination level (filter $ß_{25} \geq 75$)	ISO 4406:1999: class 21/19/16 NAS 1638: class 10
Weight	0.69 kg

HYDRAULIC SYMBOL

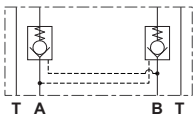

ORDERING CODE

V08000002	Pilot operated check stackable valve

OVERALL DIMENSIONS

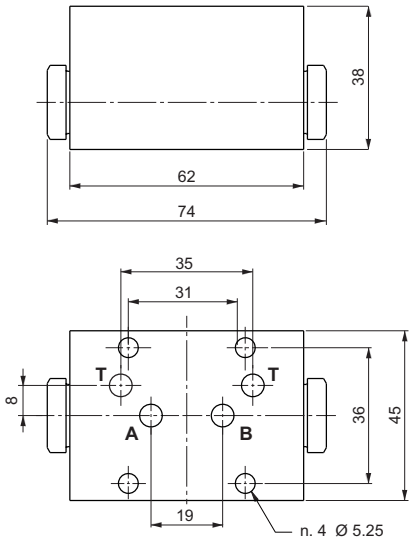

FLOW REGULATION

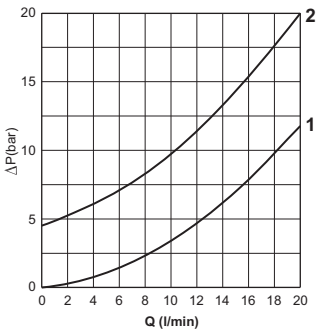

1 = piloted side flow
2 = minimum opening pressure

MODULAR ELEMENTS WITH PORTS A-B

Modular elements CM3F with ports A-B.

- Convert modular interface into threaded ports.
- Maximum flow 40 l/min.
- Threaded ports sizes G3/8"
- Cast iron zinc plated body.

FEATURES

Max. operating pressure	250 bar
Max. Flow	40 l/min
Hydraulic fluid	DIN 51524 Mineral oils
Fluid viscosity	10 ÷ 500 mm²/s
Fluid temperature	-25°C ÷ 75°C
Ambient temperature	-25°C ÷ 60°C
Max. contamination level (filter $ß_{25} \geq 75$)	ISO 4406:1999: class 21/19/16 NAS 1638: class 10
Weight	0.54 kg

HYDRAULIC SYMBOL

Accessories

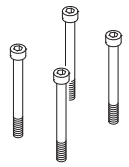 Tightening torque **5 Nm**	Elements	Code screws (x 4)	Type UNI 5931 - 8.8
	CM3F	**Q26074069**	M5x35
	CM3F + V0800005	**Q26074077**	M5x80

3

ORDERING CODE

CM	Intermediate element
3	Size
F	With ports A-B
**	**00** = No variant **V1** = Viton
1	Serial No.

OVERALL DIMENSIONS

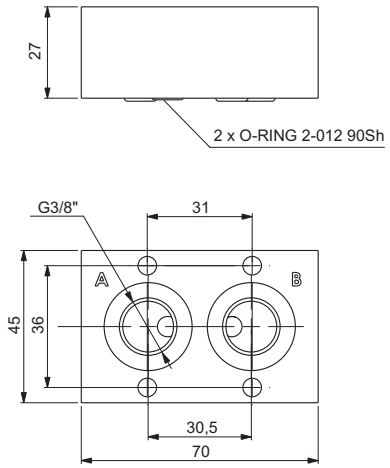

MODULAR PILOT OPERATED CHECK BANKABLE VALVES

CM3P type modular check bankable valves allow one way free flow by raising a conical shutter, while in the opposite direction the fluid can return by means of a small piston piloted by the pressure in the other line.

- Available on single A or B lines, and on double A and B lines (see hydraulic symbols).
- Threaded ports G3/8" or 9/16"-18UNF.
- Cast iron zinc plated body.

ORDERING CODE

CM	Modular bankable valve
3	Size
P	Piloted check valve
*	Port sizes: **1** = G3/8" **2** = 9/16"-18UNF
**	Control on lines A / B / AB
*	Minimum opening pressure **1** = 1 bar **5** = 5 bar
**	**00** = No variant **V1** = Viton
1	Serial No.

FEATURES

Max. operating pressure	350 bar
Minimum opening pressure spring 1	1 bar
Minimum opening pressure spring 5	5 bar
Piloting ratio	1:4
Max. flow	40 l/min
Hydraulic fluids	Mineral oils DIN 51524
Fluid viscosity	10 ÷ 500 mm²/s
Fluid temperature	-20°C ÷ 75° C
Ambient temperature	-20°C ÷ 60°C
Max. contamination level (filter $ß_{25} \geq 75$)	ISO 4406:1999: class 21/19/16 NAS 1638: class 10
Weight	1.25 kg

Accessories

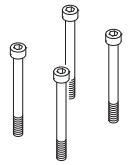

Tightening torque **5 Nm**

Elements	Code screws (x 4)	Type UNI 5931 - 8.8
CM3P	**Q26074072**	M5x50
CM3P + V0800005	**Q26074252**	M5x95

HYDRAULIC SYMBOLS

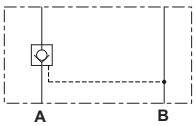

CM3P*A

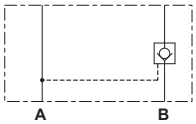

CM3P*B

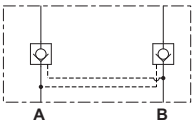

CM3P*AB

PRESSURE DROPS

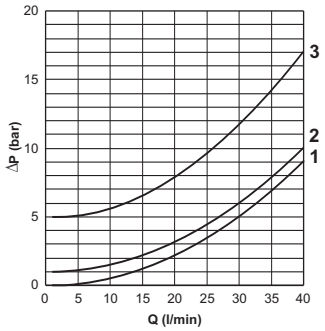

1 = Piloted side flow
2 = 1 bar
3 = 5 bar

The fluid used is a mineral based oil with a viscosity of 46 mm²/s at 40°C.
The tests have been carried out at with a fluid of a 40°C.

MOUNTING EXAMPLE WITH CDC3 VALVE

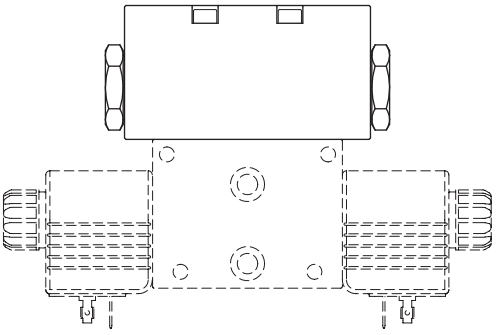

OVERALL DIMENSIONS

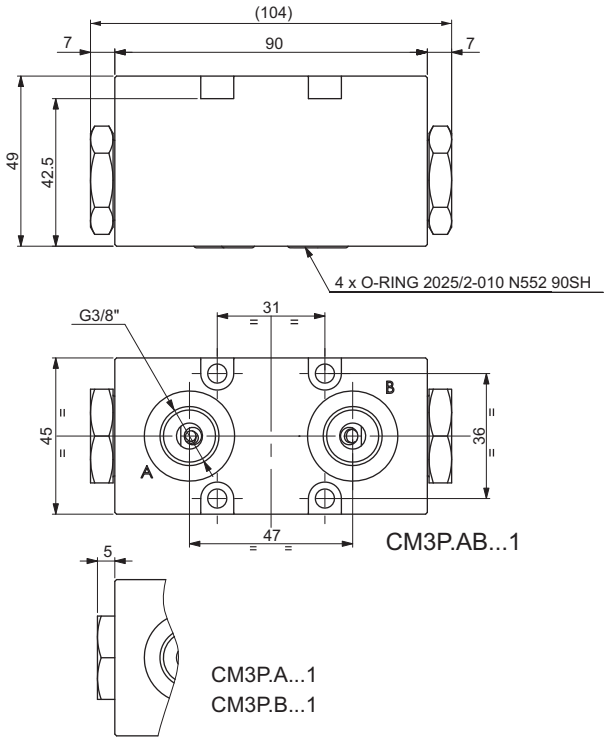

3

MODULAR MAX. PRESSURE BANKABLE VALVES

Modular max. pressure bankable valves CM3M with direct acting pressure relief valves CMP10

- Pressure range 1 ÷ 320 bar, manual adjustment with a grub screw.
- All versions can accept three types of springs with calibrated ranges as shown in the specifications. For the minimum permissible setting pressure depending on the spring, see minimum pressure setting curve.
- Available single on A or B lines, and double on AB lines, see hydraulic symbols
- Cast iron zinc plated body.

ORDERING CODE

CM	Modular bankable valve
3	Size
M	Maximum pressure valve
*	Port sizes: **1** = G3/8" **2** = 9/16"-18UNF
**	Adjustment on the lines: A / B / AB
C	Type of adjustment Grub screw
*	Setting ranges at port A **0** = max. 15 bar (neutral spring) **1** = max. 50 bar (white spring) **2** = max. 150 bar (yellow spring) **3** = max. 320 bar (green spring)
*	Setting ranges at port B (Omit if the setting is same as that at port A) **0** = max.15 bar (neutral spring) **1** = max. 50 bar (white spring) **2** = max. 150 bar (yellow spring) **3** = max. 320 bar (green spring)
**	**00** = No variant **V1** = Viton
2	Serial No.

FEATURES

Max. operating pressure	320 bar
Setting ranges: spring 0 spring 1 spring 2 spring 3	 15 bar 50 bar 150 bar 320 bar
Max. flow	40 l/min
Hydraulic fluids	Mineral oils DIN 51524
Fluid viscosity	10 ÷ 500 mm²/s
Fluid temperature	-20°C ÷ 75° C
Ambient temperature	-20°C ÷ 60°C
Max. contamination level (filtro $ß_{25} \geq 75$)	ISO 4406:1999: classe 21/19/16 NAS 1638: classe 10
Weight CM3MA/B Weight CM3MAB	1.66 kg 1.68 kg

Accessories

	Elements	Code screws (x 4)	Type UNI 5931 - 8.8
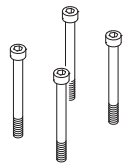 Tightening torque **5 Nm**	**CM3M**	**Q26074073**	M5x55
	CM3M + V0800005	**Q26074251**	M5x100

HYDRAULIC SYMBOLS

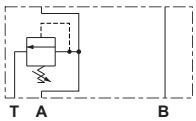

CM3M*A

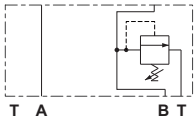

CM3M*B

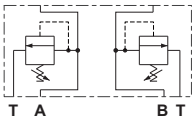

CM3M*AB

DIAGRAMS

PRESSURE - FLOW RATE

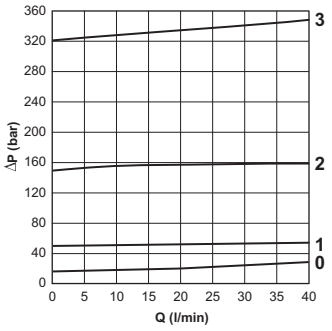

MINIMUM SETTING PRESSURE

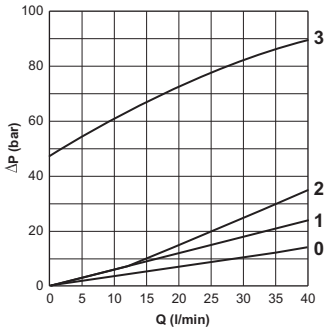

Curve 0,1,2,3:
setting ranges valve

The fluid used is a mineral based oil with a viscosity of 46 mm²/s at 40°C.
The tests have been carried out at with a fluid of a 40°C.

MOUNTING EXAMPLE WITH CDC3 VALVE

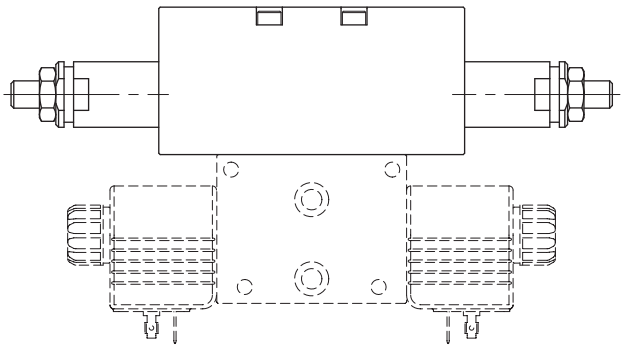

OVERALL DIMENSIONS

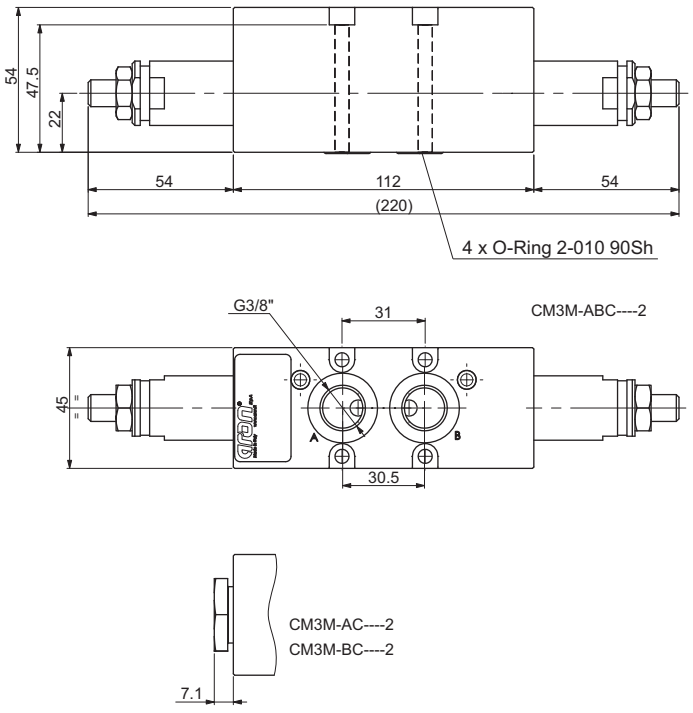

3

ACCESSORIES

INTERFACE FOR PROPORTIONAL DIRECTIONAL VALVES HPV41

Interface between HPV41 and CDC3 / CD3 / CX3 / CXDH3 / CDH3

- HSIF interface hydraulically connects the elements of proportional valves CX3/CXDH3 or ON/OFF valves CDC3/CD3/CDH3 with the elements of proportional valve HPV 41. This type of combination is highly appreciated in those cases involving great differences in flow between the controlled actuators.
- The HSIF module must be inserted into the proportional valve configuration between the last HPV41 working section and the first CDC3/CD3/CX3/CXDH3/CDH3 working section. Up to eight elements of the HPV41 and eight elements of the CDC3/CD3/CX3/CXDH3/CDH3 can be installed. The HSIf interface replace the inlet module for CDC3/CD3/CX3/CXDH3/CDH3.
- With the HSIF interface use the FUH outlet module.
- Cast iron zinc plated body.

HYDRAULIC SYMBOL

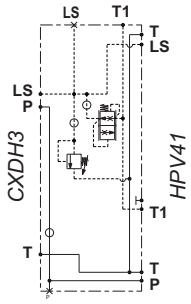

ORDERING CODE

HSIF00	Interface
41	HPV Type (HPV 41)
05033	Identifying code

FEATURES

Max. operating pressure	300 bar
Max. Flow	80 l/min
Fluid viscosity	10 ÷ 500 mm²/s
Fluid temperature	-25° ÷ 75° C
Ambient temperature	-25°C ÷ 60°C
Max. contamination level (filter $ß_{25} \geq 75$)	ISO 4406:1999: class 21/19/16 NAS 1638: class 10
Weight	3.8 kg

4

OVERALL DIMENSIONS

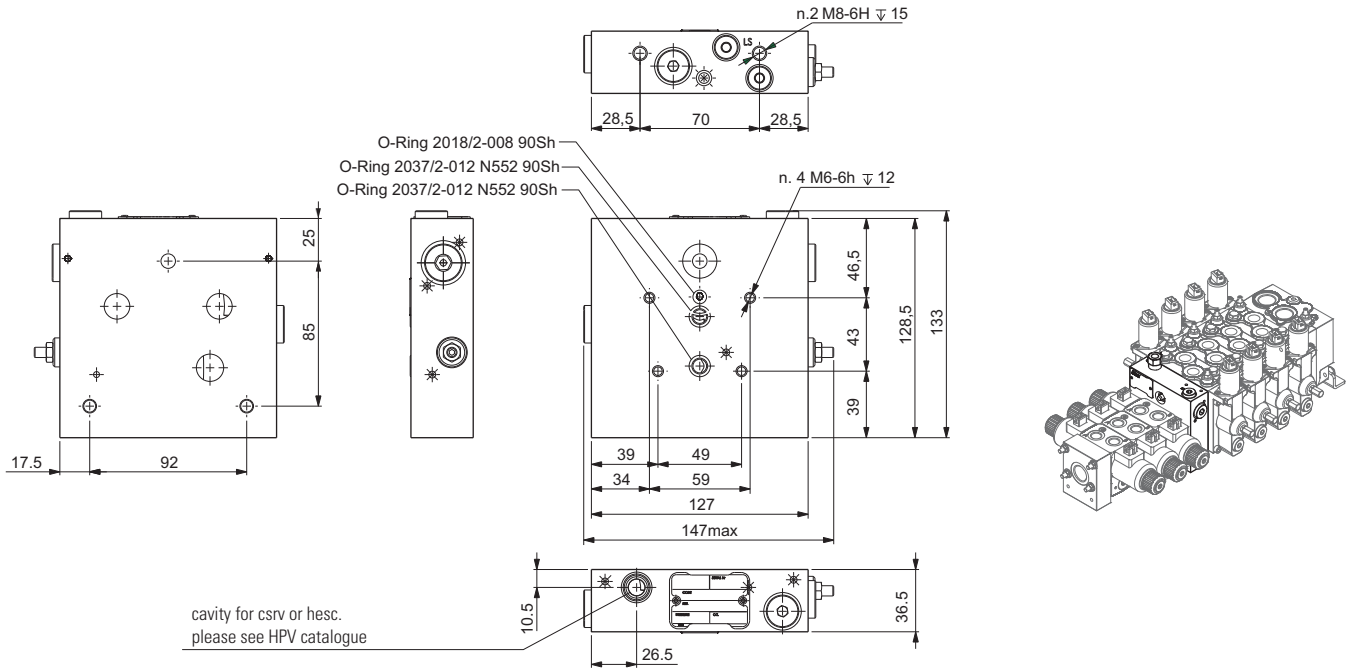

Mounting kit

SIZE 6
ON/OFF and proportional valves

Kit composed by No. 4 rods and No. 8 stud nuts

For more combinations or with intermediate element, contact our customer service.

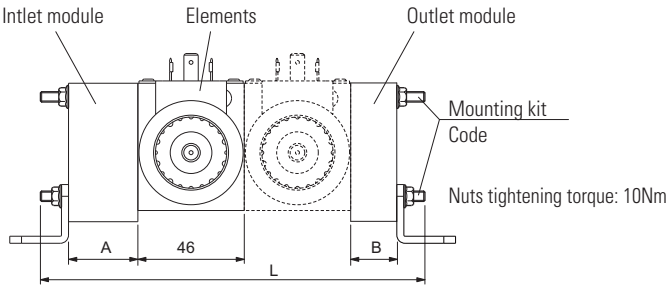

Intlet module		FE3 / FE02 (A=30 mm)							
Outlet module		FU3 (B=15 mm)		FU3* (B=20 mm)		FUT3 (B=25 mm)		FUS3 (B=35 mm)	
		Code	L (mm)	Code	L (mm)	Code	L (mm)	Code	L (mm)
Elements	1	V89B50042	121	V89B50043	125	V89B50043	125	V89B50044	140
	2	V89B50047	160	V89B50012	170	V89B50012	170	V89B50022	180
	3	V89B50013	210	V89B50013	210	V89B50023	220	V89B50049	230
	4	V89B50014	260	V89B50014	260	V89B50024	270	V89B50024	270
	5	V89B50052	300	V89B50015	310	V89B50015	310	V89B50053	320
	6	V89B50016	350	V89B50016	350	V89B50026	361	V89B50036	380
	7	V89B50055	390	V89B50017	400	V89B50017	400	V89B50027	410
	8	V89B50018	440	V89B50028	450	V89B50028	450	V89B50056	460

Intlet module		FE10S (A=35 mm)							
Outlet module		FU3 (B=15 mm)		FU3* (B=20 mm)		FUT3 (B=25 mm)		FUS3 (B=35 mm)	
		Code	L (mm)	Code	L (mm)	Code	L (mm)	Code	L (mm)
Elements	1	V89B50042	121	V89B50043	125	V89B50043	125	V89B50045	145
	2	V89B50012	170	V89B50012	170	V89B50022	180	V89B50032	190
	3	V89B50013	210	V89B50023	220	V89B50023	220	V89B50049	230
	4	V89B50014	260	V89B50024	270	V89B50024	270	V89B50034	285
	5	V89B50015	310	V89B50015	310	V89B50015	310	V89B50035	330
	6	V89B50016	350	V89B50026	361	V89B50026	361	V89B50036	380
	7	V89B50017	400	V89B50017	400	V89B50027	410	V89B50037	430
	8	V89B50028	450	V89B50028	450	V89B50028	450	V89B50038	470

Intlet module		FELS / FE10 / FE10LS (A=40 mm)							
Outlet module		FU3 (B=15 mm)		FU3* (B=20 mm)		FUT3 (B=25 mm)		FUS3 (B=35 mm)	
		Code	L (mm)	Code	L (mm)	Code	L (mm)	Code	L (mm)
Elements	1	V89B50043	125	V89B50021	130	V89B50044	140	V89B50046	150
	2	V89B50012	170	V89B50022	180	V89B50022	180	V89B50032	190
	3	V89B50023	220	V89B50023	220	V89B50049	230	V89B50033	240
	4	V89B50024	270	V89B50024	270	V89B50024	270	V89B50034	285
	5	V89B50015	310	V89B50015	310	V89B50053	320	V89B50035	330
	6	V89B50026	361	V89B50026	361	V89B50036	380	V89B50036	380
	7	V89B50017	400	V89B50027	410	V89B50027	410	V89B50037	430
	8	V89B50028	450	V89B50028	450	V89B50056	460	V89B50038	470

Intlet module		FE02Q / FE10P / FE10PS (A=57 mm) - FE10X (A=59 mm)							
Outlet module		FU3 (B=15 mm)		FU3* (B=20 mm)		FUT3 (B=25 mm)		FUS3 (B=35 mm)	
		Code	L (mm)	Code	L (mm)	Code	L (mm)	Code	L (mm)
Elements	1	V89B50044	140	V89B50045	145	V89B50046	150	V89B50047	160
	2	V89B50032	190	V89B50048	199	V89B50048	199	V89B50013	210
	3	V89B50033	240	V89B50033	240	V89B50050	250	V89B50014	260
	4	V89B50034	285	V89B50034	285	V89B50051	296	V89B50052	300
	5	V89B50035	330	V89B50035	330	V89B50054	340	V89B50016	350
	6	V89B50036	380	V89B50036	380	V89B50055	390	V89B50017	400
	7	V89B50037	430	V89B50037	430	V89B50037	430	V89B50018	440
	8	V89B50038	470	V89B50038	470	V89B50057	480	V89B50058	490

SIZE 6
Pre and post compensated valves

Kit composed by No. 4 rods and No. 4 stud nuts

For more combinations or with intermediate element, contact our customer service.

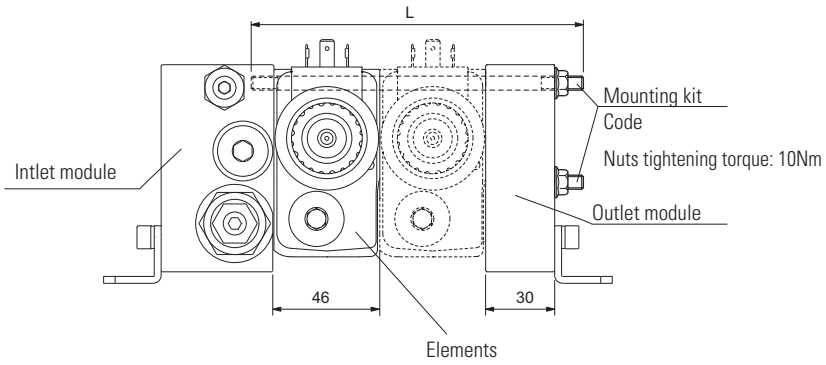

Intlet module		FEH30PQ / FEH30LS FEH30PQ / FEH35PQ/ HSIF	
Outlet module		**FUH** (B=30 mm)	
		Code	L (mm)
Elements *	1	**V89B50001**	100
	2	**V89B50002**	145
	3	**V89B50003**	190
	4	**V89B50004**	240
	5	**V89B50005**	285
	6	**V89B50006**	330
	7	**V89B50007**	380
	8	**V89B50008**	430

* only valves with LS line: CDC3/CD3 body “L-M” ; CX3 body “L”

SIZE 10
ON/OFF valves

Kit composed by No. 4 rods and No. 4 stud nuts

For more combinations contact our customer service.

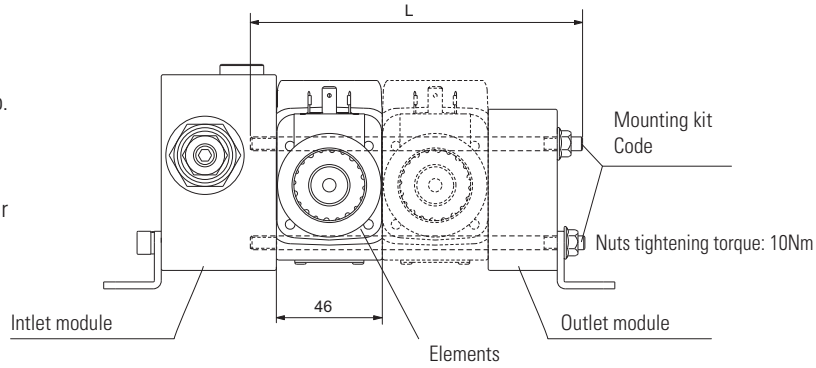

Intlet module		FE5 / FE305	
Outlet module		**FU5** (B=30 mm)	
		Code	L (mm)
Elements *	1	**V89B50002**	100
	2	**V89B50003**	145
	3	**V89B50004**	190
	4	**V89B50005**	240
	5	**V89B50006**	285
	6	**V89B50008**	330

Fixing feet

Code	Type	
V89980000	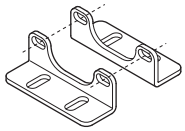	**SIZE 6 - ON/OFF and proportional valves** Kit supplied with the valves, composed by: - No. 2 feet
V89B60000 (*)	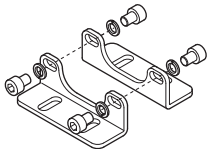 Screw tightening torque: 10Nm	**SIZE 6 - Pre and post compensated valves** Kit supplied on request (**) composed by: - No. 2 feet - No. 4 screws - No. 4 washers
V89B60001 (*)	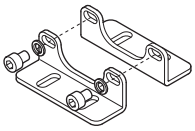 Screw tightening torque: 10Nm	**SIZE 10 - ON/OFF valves** Kit supplied on request (**) composed by: - No. 2 feet - No. 2 screws - No. 2 washers

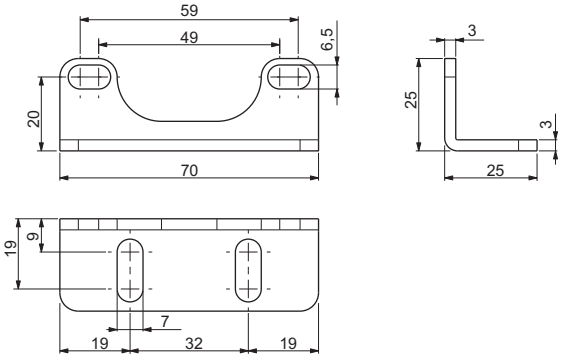

* Fixing feet can not be used with HSIF interface module unit.
** If the kit is not required, the valve can be fixed by the fixing holes on the bottom faces of the inlet and outlet modules (see drawing on page 57 and 82).

Feet mounting example

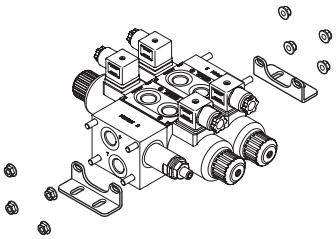

Intel module FE10, outlet module FU, mounting on BOTTOM position
(standard mounting)

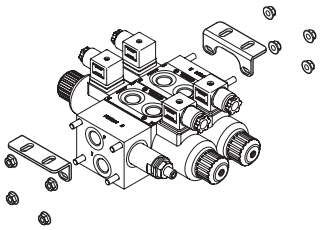

Intel module FE10, outlet module FU, mounting on TOP position
(to be specify)

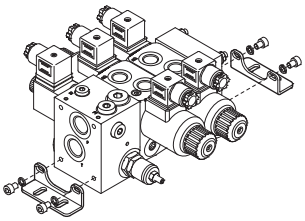

Intel module FEH30PQ, outlet module FUH, mounting on BOTTOM position
(standard mounting)

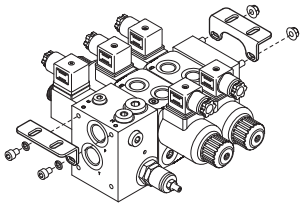

Intel module FEH30PQ, outlet module FUH, mounting on TOP position
(to be specify)

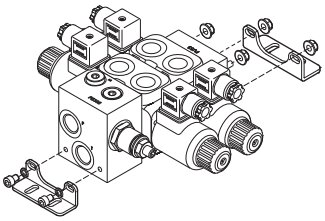

Intel module FE305, outlet module FU5, mounting on BOTTOM position
(standard mounting)

Calibrated diaphragms

FOR VALVES CD3 / CDC3 / CDCM3

Ø d (mm)	Code	Stamping xx
CLOSED	**M52050043/3**	/
0.5	**M52050043/2**	05
1.0	**M52050043**	10
2.0	**M52050043/10**	20
2.2	**M52050043/1**	22
3.0	**M52050043/30**	30

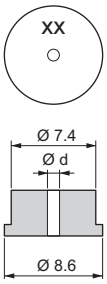

FOR VALVES CDH3 / CXDH3 / CFS3

Ø d (mm)	Code	Stamping xx
CLOSED	**M52050023/4**	/
0.3	**M52050023/21**	03
0.4	**M52050023/22**	04
0.5	**M52050023/1**	05
0.6	**M52050023/6**	06
0.7	**M52050023/8**	07
0.8	**M52050023**	08
0.9	**M52050023/17**	09
1.0	**M52050023/2**	10
1.1	**M52050023/20**	11
1.2	**M52050023/3**	12
1.3	**M52050023/19**	13
1.4	**M52050023/16**	14
1.5	**M52050023/7**	15
1.6	**M52050023/15**	16
1.8	**M52050023/11**	18
1.9	**M52050023/14**	19
2.0	**M52050023/10**	20
2.2	**M52050023/9**	22
2.5	**M52050023/5**	25
2.7	**M52050023/13**	27
3.0	**M52050023/18**	30
3.5	**M52050023/12**	35

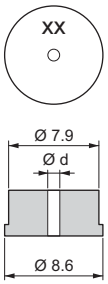

HYDRAULIC CIRCUIT EXAMPLE WITH CALIBRATED DIAPHRAGM ON "P" LINE

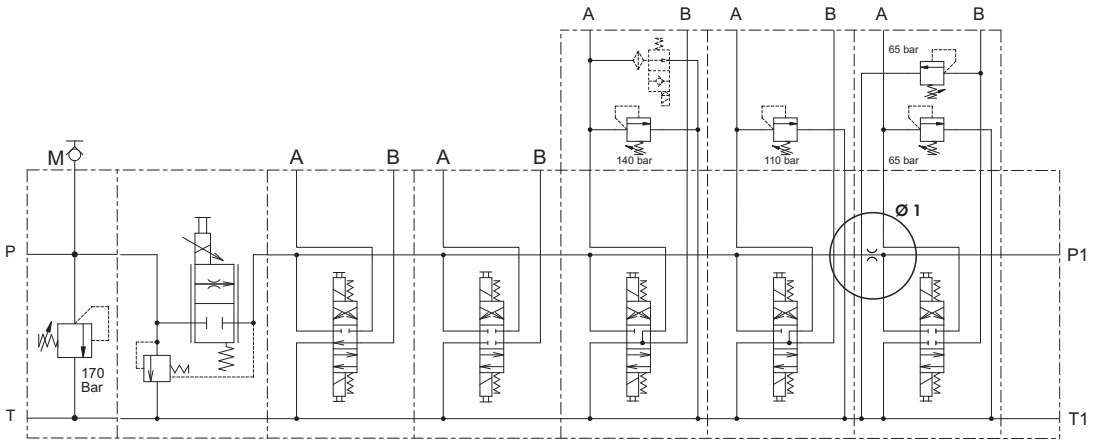

CONNECTORS FOR CONTROL VALVES IN ACCORDANCE WITH DIN 43650 / ISO 4400

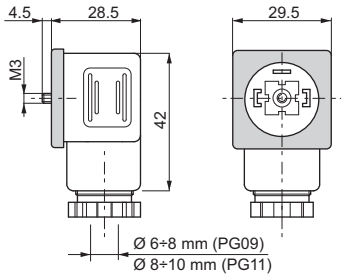

Connector	Protection level	Type	Cable gland	Code
Standard	IP65	Black color	PG09	V86 05 0002
		Grey color	PG09	V86 05 0004
		Black color	PG11	V86 05 0006
		Grey color	PG11	V86 05 0008
Lens cover with pilot light *(1)*	IP65	12 VAC/VDC	PG09	V86 10 0018
		24 VAC/VDC	PG09	V86 10 0012
		115 VAC/VDC	PG09	V86 10 0020
		230 VAC/VDC	PG09	V86 10 0022

(1) do not use for proportional versions

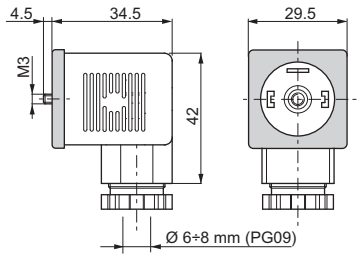

Connector	Protection level	Type	Cable gland	Code
With rectifier *(1)* *Inlet voltage 12÷230 VAC* *Outlet voltage 9÷205 VDC*	IP65	Black color	PG09	V86 20 0002
		Grey color	PG09	V86 20 0004
Lens cover with pilot light and rectifier *(1)* *Inlet voltage 12÷230 VAC* *Outlet voltage 9÷205 VDC*	IP65	12 VAC	PG09	V86 25 0018
		24 VAC	PG09	V86 25 0019
		48 VAC	PG09	V86 25 0020
		115 VAC	PG09	V86 25 0021
		230 VAC	PG09	V86 25 0022

(1) do not use for proportional versions

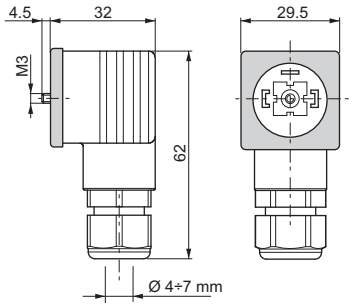

Connector	Protection level	Type	Cable gland	Code
With protection level IP67	IP67	Black color	—	V86 28 0001
		Grey color	—	V86 28 0002

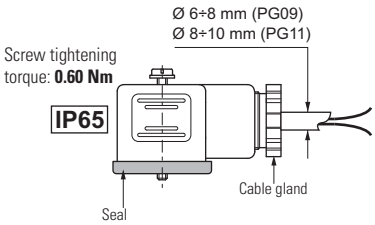

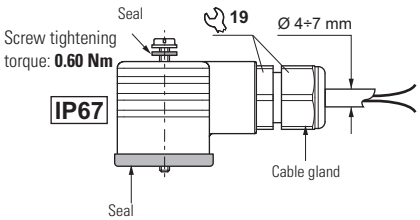

Electrical features of connectors

Description	IP65	IP67
AC rated voltage DC rated voltage	Max. 250 V Max. 300 V	Max. 250 V Max. 300 V
Pin conctat nominal current Pin conctat max. current	10A 16A	10A 16A
Max. section cable	1.5 mm²	1.5 mm²
Cable gland PG09 - M16x1,5 Cable gland PG11 - G 1/2" - M20x1,5	Ø cable 6 ÷ 8 mm Ø cable 8 ÷ 10 mm	Ø cable 4 ÷ 7 mm —
Protection level Insulation class Operating temperature	IP65 EN60529 VDE 0110-1/89 -40°C ÷ 90 C°	IP67 EN60529 VDE 0110-1/89 -20°C ÷ 80 C°

The degrees of protection indicate is guaranteed only if the connectors were properly mounted with his original seals.

Electrical circuits

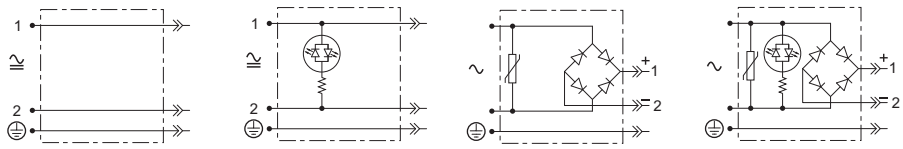

Standard — Bipolar led — Rectifier and VDR protection — Bipolar led, rectifier and VDR protection

AMP JUNIOR CONNECTORS

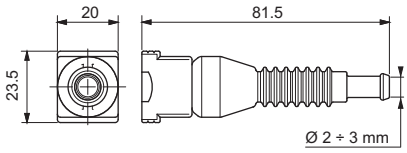

Connector	Type	Cable section	Pin conctat max current	Code
AMP Junior connector Timer 2 conctat	Black color	0.5 ÷ 1.5 mm²	10A	RKRC0808000

18W COILS

Type of protection	IP 65
Number of cycle	18000/h
Supply tolerance	±10%
Ambient	-30°C ÷ 60°C

Duty cycle	100% ED
Insulation class wire	F
Weight	0.141 kg

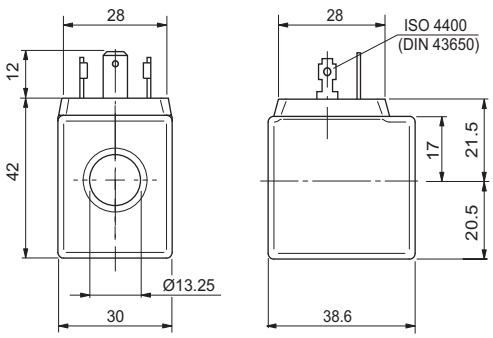

STANDARD Hirschmann ISO 4400 DIN43650

Coil		Max winding temperature (1)	Rated power	Resistance ±7% (2)	Spare code
Code	Voltage				
L	12 VDC	135 °C	18 W	7.7 Ω	M14000001
M	24 VDC	135 °C	18 W	31 Ω	M14000002
N	48 VDC	135 °C	18 W	116 Ω	M14000003
2	21.6 VDC	135 °C	18 W	27 Ω	M14000009
Z	102 VDC (3)	120 °C	18 W	578 Ω	M14000006
X	205 VDC (3)	120 °C	18 W	2627 Ω	M14000007

(1) Ambient temperature 25 °C - (2) Ambient temperature 20 °C

(3) The european low voltage directive is applied to electronical equipments used at a nominal voltages between 50 and 1000 VAC or 75 and 1500 VDC. In conformity with the low directive each part of the manifold or the subplate on which the valve is mounted should be connected to a protective earth with a resistence less than 0.1 ohms.

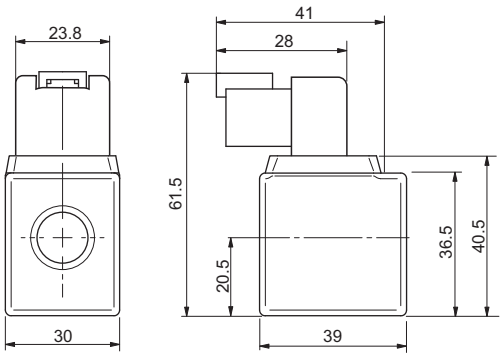

DEUTSCH and bidirectional integrated diode (CX variant)

Coil		Max winding temperature (1)	Rated power	Resistance ±7% (2)	Spare code
Code	Voltage				
L	12 VDC	135 °C	18 W	7.7 Ω	M14760001
M	24 VDC	135 °C	18 W	31 Ω	M14760002

(1) Ambient temperature 25 °C - (2) Ambient temperature 20 °C

4

22W COILS

Type of protection	IP 65
Number of cycle	18000/h
Supply tolerance	±10%
Ambient temperature	-30°C ÷ 60°C

Duty cycle	100% ED
Insulation class wire	H
Weight	0.2 kg

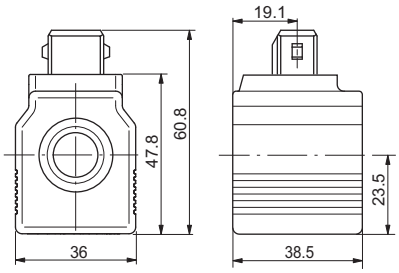

AMP Junior (AJ variant)

Coil		Max winding temperature (1)	Rated power	Resistance ±7% (2)	Spare code
Code	Voltage				
L	12 VDC	135 °C	22 W	6.3 Ω	M14730001
M	24 VDC	135 °C	22 W	25.6 Ω	M14730002

(1) Ambient temperature 25 °C - (2) Ambient temperature 20 °C

27W COILS - A09

Type of protection	IP 65
Number of cycle	18000/h
Supply tolerance	±10%
Ambient temperature	-30°C ÷ 60°C

Duty cycle	100% ED
Insulation class wire	H
Weight	0.215 kg

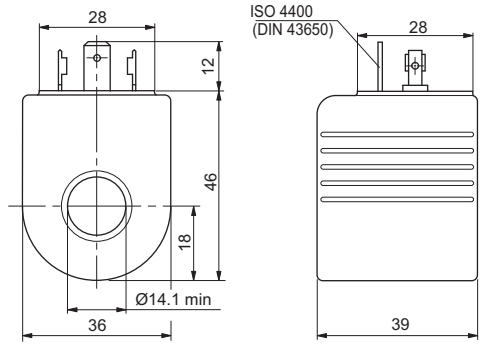

STANDARD Hirschmann ISO 4400 DIN43650 (H connection)

Coil		Max winding	Rated	Resistance	Spare
Code	Voltage	temperature (1)	power	±7% (2)	code
L	12 VDC	123 °C	27 W	5.3 Ω	M14310001
M	24 VDC	123 °C	27 W	21.3 Ω	M14310002
N	48 VDC	123 °C	27 W	85.3 Ω	M14310003
Z	102 VDC (3)	123 °C	27 W	392 Ω	M14310008
P	110 VDC (3)	123 °C	27 W	448 Ω	M14310005
X	205 VDC (3)	123 °C	27 W	1577 Ω	M14310009

(1) Ambient temperature 25 °C - (2) Ambient temperature 20 °C
(3) The european low voltage directive is applied to electronical equipments used at a nominal voltages between 50 and 1000 VAC or 75 and 1500 VDC. In conformity with the low directive each part of the manifold or the subplate on which the valve is mounted should be connected to a protective earth with a resistence less than 0.1 ohms.

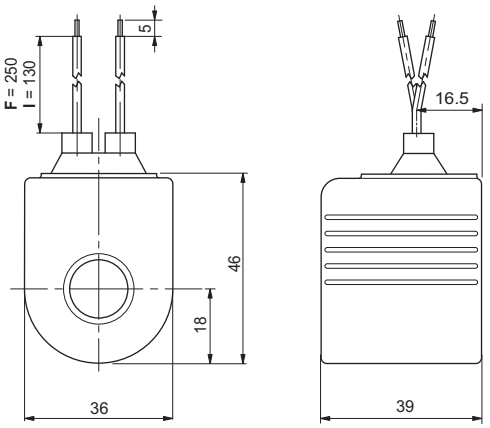

WIRES and integrated bidirectional DIODE (F/I connection - FL/LD variant)

Coil		Wires	Max winding	Rated	Resistance	Spare
Code	Voltage	(mm)	temperature (1)	power	±7% (2)	code
L	12 VDC	F = 250	123 °C	27 W	5.3 Ω	M14070011
M	24 VDC	F = 250	123 °C	27 W	21.3 Ω	M14070012
L	12 VDC	I = 130	123 °C	27 W	5.3 Ω	M14330001
M	24 VDC	I = 130	123 °C	27 W	21.3 Ω	M14330002

(1) Ambient temperature 25 °C - (2) Ambient temperature 20 °C

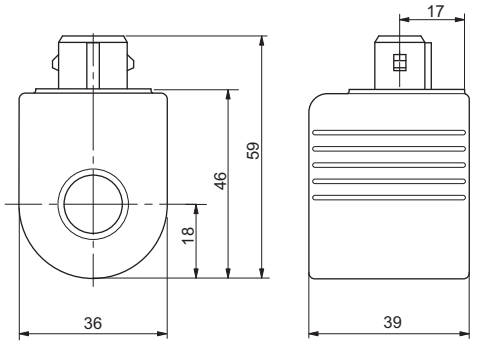

AMP Junior (A connection - AJ variant)

Coil		Max winding	Rated	Resistance	Spare
Code	Voltage	temperature (1)	power	±7% (2)	code
L	12 VDC	123 °C	27 W	5.3 Ω	M14320001
M	24 VDC	123 °C	27 W	21.3 Ω	M14320002

(1) Ambient temperature 25 °C - (2) Ambient temperature 20 °C

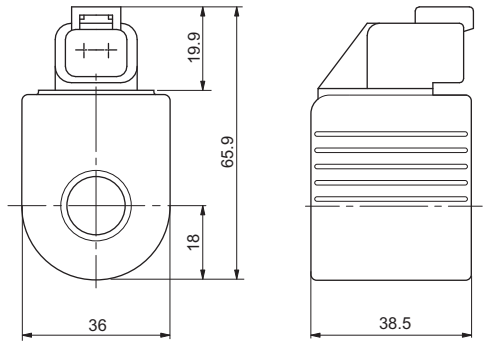

DEUTSCH + bidirectional DIODE - DT04-2P (D connection - CX variant)

Coil		Max winding	Rated	Resistance	Spare
Code	Voltage	temperature (1)	power	±7% (2)	code
L	12 VDC	123 °C	27 W	5.3 Ω	M14340001
M	24 VDC	123 °C	27 W	21.3 Ω	M14340002

(1) Ambient temperature 25 °C - (2) Ambient temperature 20 °C

30 W COILS - D15

Type of protection	IP 66
Number of cycle	18000/h
Supply tolerance	±10%
Ambient temperature	-25°C ÷ 60°C

Duty cycle	100% ED
Insulation class wire	H
Weight	0.354 kg

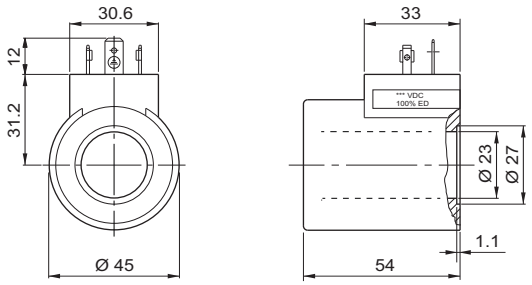

STANDARD Hirschmann ISO 4400 DIN43650

Coil		Max winding temperature (1)	Rated power	Resistance ±7% (2)	Spare code
Code	Voltage				
L	12 VDC	110 °C	30 W	4.8 Ω	M14450002
M	24 VDC	110 °C	30 W	18.8 Ω	M14450004
V	28 VDC	110 °C	30 W	25.6 Ω	M14450005
N	48 VDC	110 °C	30 W	75.2 Ω	M14450006
Z	102 VDC (3)	110 °C	30 W	340 Ω	M14450018
P	110 VDC (3)	110 °C	30 W	387 Ω	M14450008
X	205 VDC (3)	110 °C	30 W	1378 Ω	M14450019

(1) Ambient temperature 25 °C
(2) Ambient temperature 20 °C
(3) The european low voltage directive is applied to electronical equipments used at a nominal voltages between 50 and 1000 VAC or 75 and 1500 VDC. In conformity with the low directive each part of the manifold or the subplate on which the valve is mounted should be connected to a protective earth with a resistence less than 0.1 ohms.

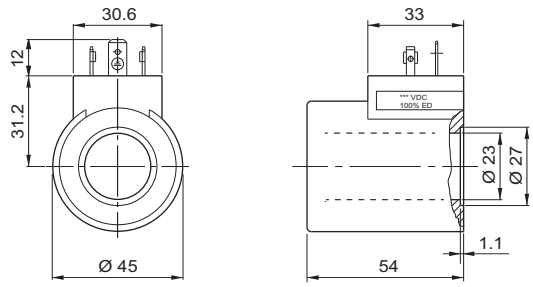

Hirschmann ISO 4400 DIN43650 eCoat (1) surface treatment (RS variant)

Coil		Max winding temperature (2)	Rated power	Resistance ±7% (3)	Spare code
Code	Voltage				
L	12 VDC	110 °C	30 W	4.8 Ω	M14820001
M	24 VDC	110 °C	30 W	18.8 Ω	M14820002
V	28 VDC	110 °C	30 W	25.6 Ω	M14820005
P	110 VDC (4)	110 °C	30 W	387 Ω	M14820008

(1) Sealed coil winding with steel out housing with eCoat protection. Has succesfully overcome more than 700 hours of salt spray test before red rust (test according to UNI EN ISO 9227 and test evaluation according to UNI EN ISO 10289).
(2) Ambient temperature 25 °C
(3) Ambient temperature 20 °C
(4) The european low voltage directive is applied to electronical equipments used at a nominal voltages between 50 and 1000 VAC or 75 and 1500 VDC. In conformity with the low directive each part of the manifold or the subplate on which the valve is mounted should be connected to a protective earth with a resistence less than 0.1 ohms.

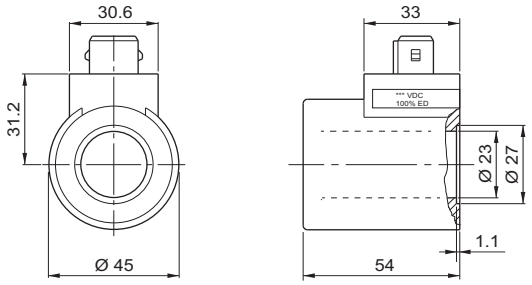

AMP Junior (AJ variant)

Coil		Max winding temperature (1)	Rated power	Resistance ±7% (2)	Spare code
Code	Voltage				
L	12 VDC	110 °C	30 W	4.8 Ω	M14460002
M	24 VDC	110 °C	30 W	18.8 Ω	M14460004

(1) Ambient temperature 25 °C
(2) Ambient temperature 20 °C

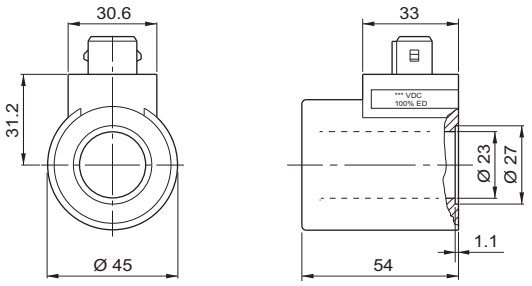

AMP Junior + Bidirectional DIODE (AD variant)

Coil		Max winding temperature (1)	Rated power	Resistance ±7% (2)	Spare code
Code	Voltage				
L	12 VDC	110 °C	30 W	4.8 Ω	M14470002
M	24 VDC	110 °C	30 W	18.8 Ω	M14470004

(1) Ambient temperature 25 °C
(2) Ambient temperature 20 °C

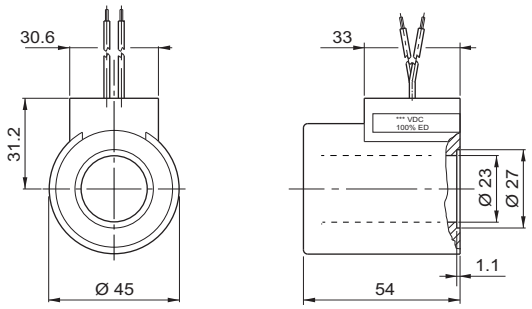

WIRES 175 mm (SL variant)

Coil		Max winding temperature (1)	Rated power	Resistance ±7% (2)	Spare code
Code	Voltage				
L	12 VDC	110 °C	30 W	4.8 Ω	M14480002
M	24 VDC	110 °C	30 W	18.8 Ω	M14480004

(1) Ambient temperature 25 °C
(2) Ambient temperature 20 °C

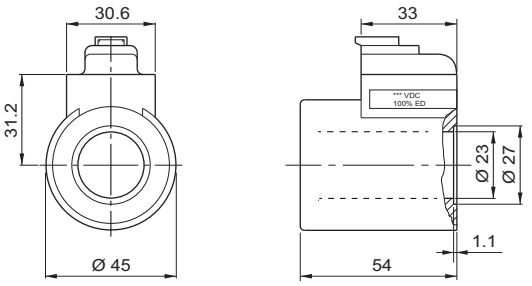

DEUTSCH DT04-2P (CZ variant)

Coil		Max winding temperature (1)	Rated power	Resistance ±7% (2)	Spare code
Code	Voltage				
L	12 VDC	110 °C	30 W	4.8 Ω	M14490002
M	24 VDC	110 °C	30 W	18.8 Ω	M14490004

(1) Ambient temperature 25 °C
(2) Ambient temperature 20 °C

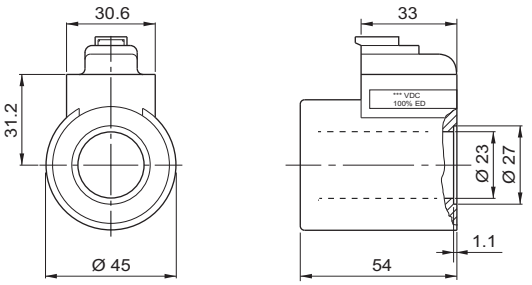

DEUTSCH DT04-2P + Bidirectional DIODE (CX variant)

Coil		Max winding temperature (1)	Rated power	Resistance ±7% (2)	Spare code
Code	Voltage				
L	12 VDC	110 °C	30 W	4.8 Ω	M14370002
M	24 VDC	110 °C	30 W	18.8 Ω	M14370004

(1) Ambient temperature 25 °C
(2) Ambient temperature 20 °C

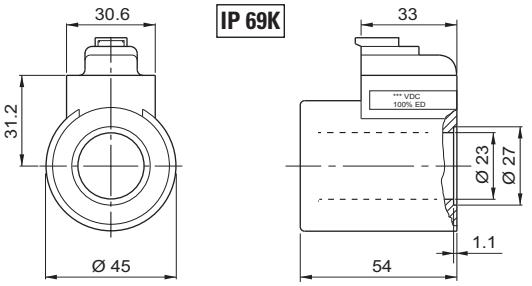

DEUTSCH DT04-2P eCoat (1) surface treatment (R6 variant)

Coil		Max winding temperature (2)	Rated power	Resistance ±7% (3)	Spare code
Code	Voltage				
L	12 VDC	110 °C	30 W	4.8 Ω	M14830001
M	24 VDC	110 °C	30 W	18.8 Ω	M14830002

(1) Sealed coil winding with steel out housing with eCoat protection. Has succesfully overcome more than 700 hours of salt spray test before red rust (test according to UNI EN ISO 9227 and test evaluation according to UNI EN ISO 10289).
(2) Ambient temperature 25 °C
(3) Ambient temperature 20 °C

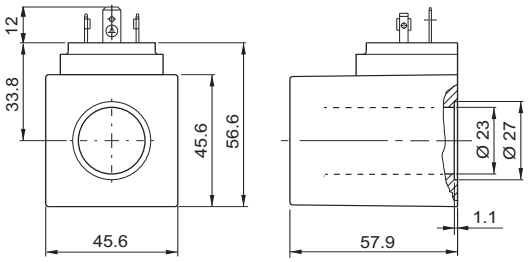

Until end of stock

Hirschmann ISO 4400 DIN43650 PLASTIC body (RS variant)

Coil		Max winding temperature (1)	Rated power	Resistance ±7% (2)	Spare code
Code	Voltage				
L	12 VDC	110 °C	30 W	4.8 Ω	M14630002
M	24 VDC	110 °C	30 W	18.8 Ω	M14630004
V	28 VDC	110 °C	30 W	25.6 Ω	M14630005
P	110 VDC (4)	110 °C	30 W	387 Ω	M14630008

(1) Ambient temperature 25 °C
(2) Ambient temperature 20 °C
(3) The european low voltage directive is applied to electronical equipments used at a nominal voltages between 50 and 1000 VAC or 75 and 1500 VDC. In conformity with the low directive each part of the manifold or the subplate on which the valve is mounted should be connected to a protective earth with a resistence less than 0.1 ohms.

40 W COILS - D15

Type of protection	IP 66
Number of cycle	18000/h
Supply tolerance	±10%
Ambient temperature	-54°C ÷ 60°C

Duty cycle	100% ED
Insulation class wire	H
Weight	0.354 kg

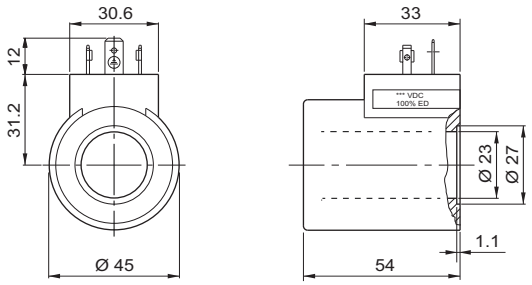

STANDARD Hirschmann ISO 4400 DIN43650

Coil		Max winding temperature (1)	Rated power	Resistance ±7% (2)	Spare code
Code	Voltage				
L	12 VDC	135 °C	40 W	3.6 Ω	M14600001
M	24 VDC	135 °C	40 W	14.4 Ω	M14600002

(1) Ambient temperature 25 °C

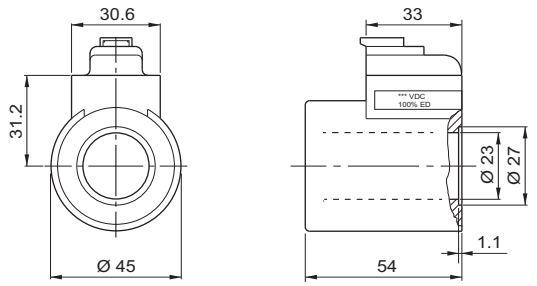

DEUTSCH DT04-2P (CZ variant)

Coil		Max winding temperature (1)	Rated power	Resistance ±7% (2)	Spare code
Code	Voltage				
L	12 VDC	135 °C	40 W	3.6 Ω	M14610001
M	24 VDC	135 °C	40 W	14.4 Ω	M14610002

(1) Ambient temperature 25 °C

D15P COILS - (FOR PROPORTIONAL VALVES)

Type of protection	IP 66
Number of cycle	18000/h
Supply tolerance	±10%
Ambient temperature	-30°C ÷ 60°C

Duty cycle	100% ED
Insulation class wire	H
Weight	0.354 kg

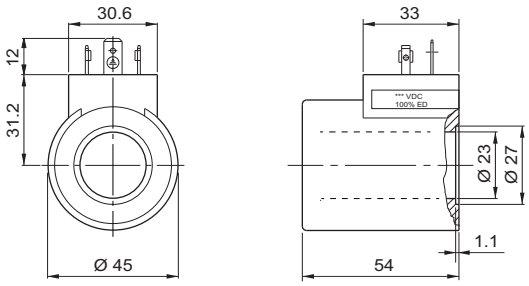

STANDARD Hirschmann ISO 4400 DIN43650

Coil		Max winding temperature (1)	Current	Resistance ±7% (2)	Spare code
Code	Voltage				
E	9 VDC	125 °C	2.35 A	2.25 Ω	M14230101
F	12 VDC	125 °C	1.76 A	4 Ω	M14230102
G	24 VDC	125 °C	0.88 A	16 Ω	M14230103

(1) Ambient temperature 25 °C - (2) Ambient temperature 20 °C

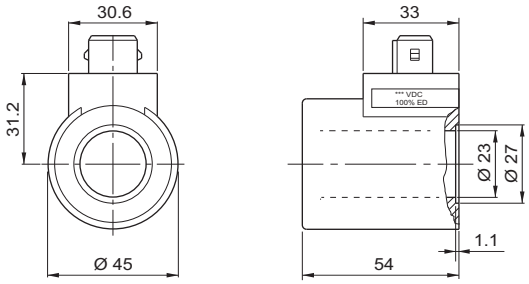

AMP Junior (AJ variant)

Coil		Max winding temperature (1)	Current	Resistance ±7% (2)	Spare code
Code	Voltage				
E	9 VDC	125 °C	2.35 A	2.25 Ω	M14770001
F	12 VDC	125 °C	1.76 A	4 Ω	M14770002
G	24 VDC	125 °C	0.88 A	16 Ω	M14770003

(1) Ambient temperature 25 °C - (2) Ambient temperature 20 °C

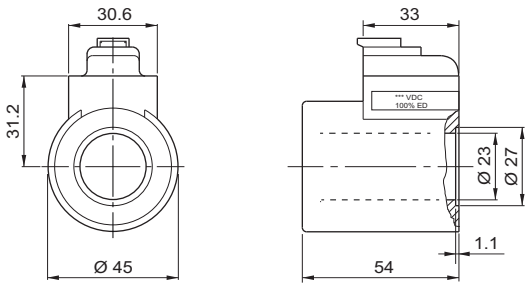

DEUTSCH DT04-2P (CZ variant)

Coil		Max winding temperature (1)	Current	Resistance ±7% (2)	Spare code
Code	Voltage				
E	9 VDC	125 °C	2.35 A	2.25 Ω	M14590001
F	12 VDC	125 °C	1.76 A	4 Ω	M14590002
G	24 VDC	125 °C	0.88 A	16 Ω	M14590004

(1) Ambient temperature 25 °C - (2) Ambient temperature 20 °C

DANA BREVINI® Motion Systems

HOW TO ORDER

EXAMPLE WITH NOT COMPENSATED VALVES - SIZE 6

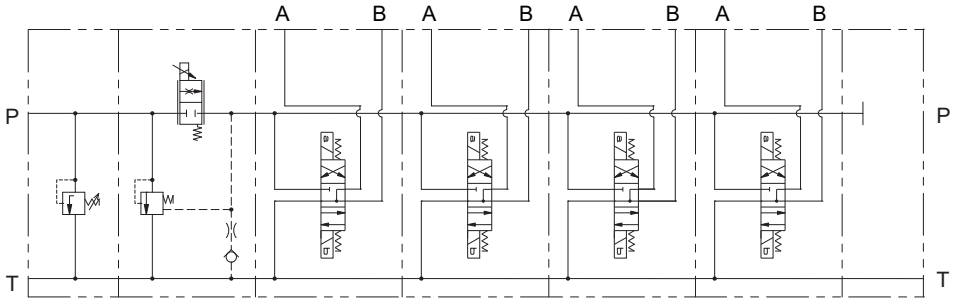

FE1031C3002	-	CXQ3CTIDFS12	-	4 x CDC3AE03CLS12	-	FU31002	-	V89B50025	-	*
• Inlet module unit with pressure relief valve • Size 3 • Port G3/8" • Adjustment pressure with grub screw • Setting range: 320 bar • No variant • Serial No. 2		• Open loop proportional compensated flow regulator • Size 3 • 3 way compensation with secondary line • Flow rates 25 l/min • With decompression • Coil 1.76A (12 VDC) • No variant • Serial No. 2		• No. 4 directional control bankable valves • Size 3 • Parallel body ports G3/8" • Electrical operator • Spool 03 • Mounting C double solenoid • Coil 12 VDC • No variant • Serial No. 2		• Outlet module unit • Size 3 • Port size T G3/8" • No variant • Serial No. 2		• Mounting kit for 5 bankable valves and inlet module unit FE10		* It is not need to specify the fixing kit, standard supplied

No. 8 connectors black	**8 x V86050002**

EXAMPLE WITH COMPENSATED VALVES - SIZE 6

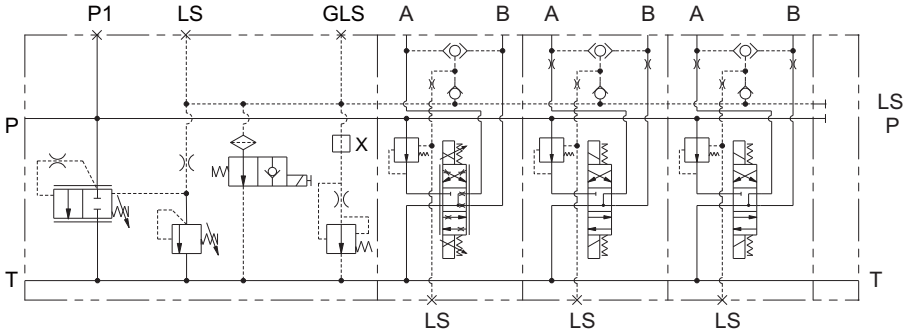

5

FEH30PQ33C3MS11	-	CXDH3CA03N48GS11	-	2 x CDH3AE03C104MS11	-	FUH35001	-	V89B50003	-	V89B60000
• Open center inlet module for fixed displacement pumps • Electrical venting valve • Pressure compensator element • Ports G1/2" • Adjustment pressure with grub screw • Setting range: >150 bar • Voltage venting valve 24 VDC • No variant • Serial No. 1		• Proportional compensated valve • Size 3 • Double solenoid • Parallel body ports G3/8" • Spool 03 • Symmetrical flow path control • Flow rating 35 l/min • Differential pressure 8 bar • Coil 24 VDC (0.88A) • No variant • Serial No. 1		• No. 2 ON/OFF compensated valve • Size 3 • Parallel body ports G3/8" • Electrical operator • Spool 03 • Double solenoid • Holed washer on port A/B 1.3 l/min • Differential pressure 4 bar • Coil 24 VDC • No variant • Serial No. 1		• Outlet module unit • Size 3 • Port size T G3/4" • No variant • Serial No. 1		• Mounting kit for 3 bankable valves and inlet module unit FEH30PQ		• Fixing feet kit for inlet module FEH30PQ and outlet module FUH

N. 6 connectors black N. 1 connector grey	**6 x V86050002** **1 x V86050004**

EXAMPLE WITH COMPENSATED AND NOT COMPENSATED VALVES - SIZE 6

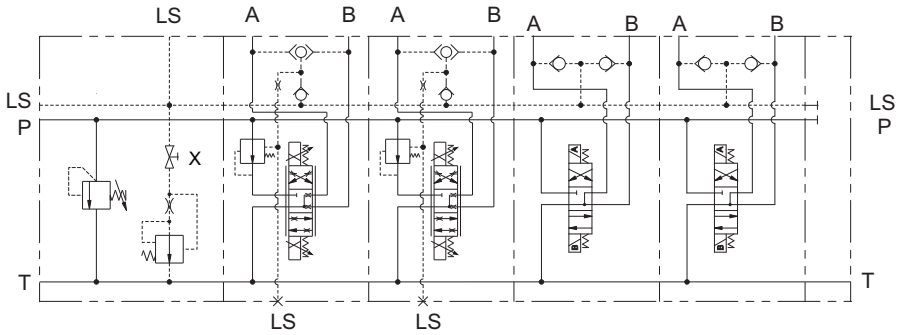

FEH30LS33C2001	-	2 x CXDH3CA03N34GS11	-	2 x CD3LE03CMS12	-	FUH35001	-	V89B50004	-	V89B60000
• Closed center inlet module for variable displacement load sensing pumps • LS signal • Size 3 • Ports G1/2" • Adjustment pressure with grub screw • Setting range: 140 bar • No variant • Serial No. 1		• No. 2 proportional compensated valves • Size 3 • Double solenoid • Parallel body ports G3/8" • Spool 03 • Symmetrical flow path control • Flow rating 18 l/min • Differential pressure 4 bar • Coil 0.88A (24 VDC) • No variant • Serial No. 1		• N. 2 directional control valves • Size 3 • Parallel body ports G3/8" LS version • Electrical operator • Spool 03 mounting C • Double solenoid • Coil 24 VDC • No variant • Serial No. 2		• Outlet module unit • Size 3 • Port size T G3/4" • No variant • Serial No. 1		• Mounting kit for 4 bankable valves and inlet module unit FEH30LS		• Fixing feet kit for inlet module FEH30LS and outlet module FUH

N. 4 connectors black
N. 4 connector grey

4 x V86050002
4 x V86050004

5

EXAMPLE WITH DIRECTIONAL CONTROL VALVES - SIZE 10

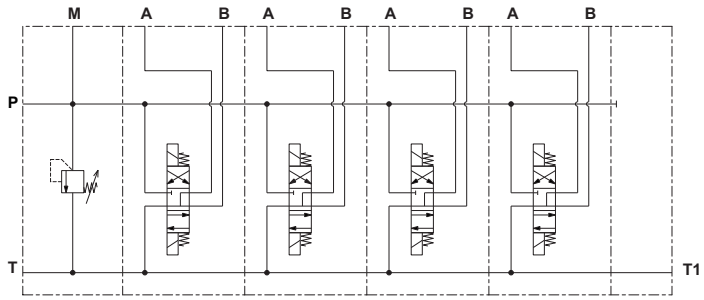

FE3053C3001	-	4 x CD5N03CLS10	-	FU53001	-	*
• Inlet module unit with pressure relief valve • Size 5 • Port G1/2" • Adjustment pressure with grub screw • Setting range: 350 bar • No variant • Serial No. 1		• No. 4 directional control bankable valves • Size 5 • Parallel body ports G1/2" • Electrical operator • Spool 03 • Mounting C double solenoid • Coil 12 VDC • No variant • Serial No. 1		• Outlet module unit • Size 5 • Port size T G3/4" • No variant • Serial No. 1		* Without feet kit, mounting on bottom position on inlet and outlet module

No. 8 connectors black **8 x V86050002**

EXAMPLE WITH DIRECTIONAL CONTROL VALVES - SIZE 10 AND SIZE 6

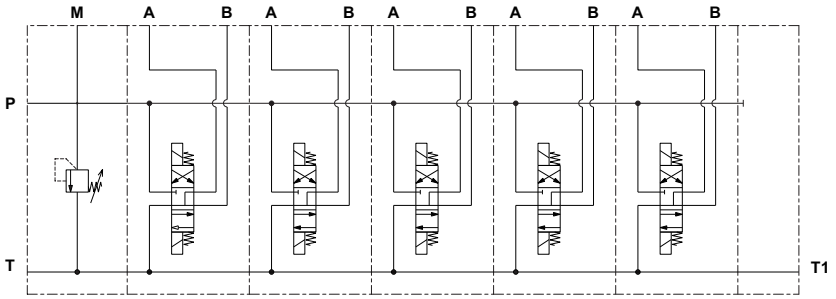

FE3053C2001	-	2 x CD5N03CLS10	-	2 x CD3AE03CLS12	-	1 x CDC3AE03CLS12	-	FU53001	-	V89B60001
• Inlet module unit with pressure relief valve • Size 5 • Port G1/2" • Adjustment pressure with grub screw • Setting range: 140 bar • No variant • Serial No. 1		• No. 2 directional control bankable valves • Size 5 • Parallel body ports G1/2" • Electrical operator • Spool 03 • Mounting C double solenoid • Coil 12 VDC • No variant • Serial No. 1		• No. 2 directional control bankable valves • Size 3 • Parallel body ports G3/8" • Electrical operator • Spool 03 • Mounting C double solenoid • Coil 12 VDC • No variant • Serial No. 2		• No. 1 directional control bankable valves • Size 3 • Parallel body ports G3/8" • Electrical operator • Spool 03 • Mounting C double solenoid • Coil 12 VDC • No variant • Serial No. 2		• Otulet module unit • Size 5 • Port size T G3/4" • No variant • Serial No. 1		• Fixing feet kit for inlet module FE305 and outlet module FU5

Maximum working pressure is defined by the lower pressure of the used valves.

No. 10 connectors black **10 x V86050002**

ELECTROMAGNETIC COMPATIBILITY "EMC" (2014/30 EC)

The PRODUCTS NOT CONTAINING ELECTRONIC BOARDS INSIDE for the actuation of the hydraulic control (as a pure example our CD3-CDC3-CXDH3, modules MHPF - MHOF) are defined "passive" from the electrical point of view, as driven by an external power/command unit.
These products therefore don't fall directly within the field of application of the aforementioned directive and therefore are not subject to the relevant certification and CE marking by Dana Brevini S.p.a.

It will be instead the external power/command unit, chosen by the Customer according to his needs and not included in the hydraulic system supplied by Dana Brevini S.p.a., who must be certified according with the directive and depending on the environment where it will be used (industrial, mobile, home).

Note

Note

Note

Code DOC00046 - Rev. 10

Dana Motion Systems Italia S.r.l.
Fluid Power Division

Sede operativa: Via Giulio Natta 1, 42124 Reggio Emilia - Italy
Tel: +39.0522.270711 - Fax: +39.0522.505856

Sede legale: Via Luciano Brevini 1/A, 42124 Reggio Emilia - Italy
Tel: +39.0522.9281 - Fax: +39.0522.928300

www.dana.com/brevini - dana.re@dana.com